VIRON® INTERNATIONAL CORP.
OWOSSO, MICHIGAN TEMPLE, TEXAS
989-723-8255
989-723-8417 FAX EMAIL: vironinfo@vironintl.com
ENVIRONMENTAL CONTROL SYSTEMS

USER	
REP.	
JOB NO.	
DATE	SHEET OF
DRAWN BY	

0"-30"ø 60° ELBOW

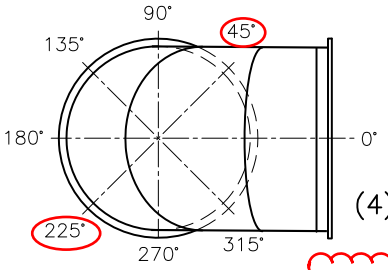

(4) GORE CONSTRUCTION

VERTICAL ORIENTATION
SEAM WELDS @ 45° & 225°

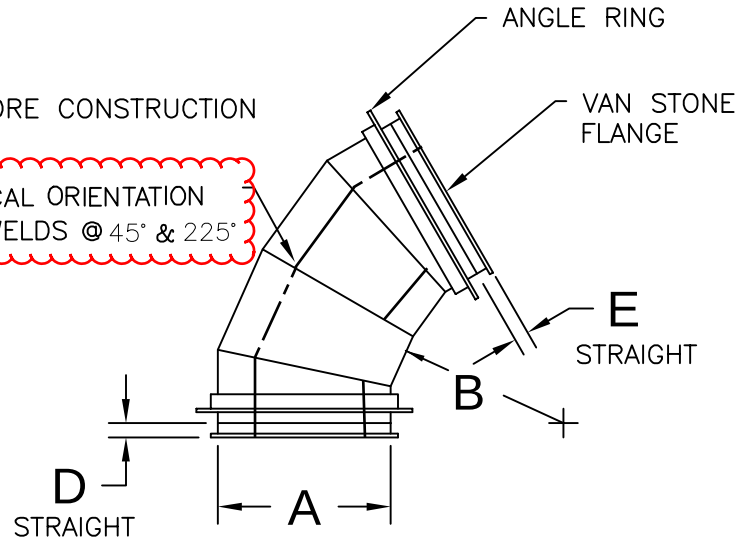

NOTES:
1. ☐ 304L ☐ 316L SST MATERIAL WITH 2B FINISH.
2. 304 SST ANGLE RINGS DRILLED
3. HALAR COATING, INTERIOR ONLY.
4. TIG WELDS ONLY.
5. FUSION WELDS ON ALL LONGITUDINAL SEAMS.
6. STANDARD ELBOWS B=A.

STATIC PRESSURE
☐ -6"WG ☐ -10"WG
OTHER: _____

PART NUMBER	DESCRIPTION A	B	D	E	GA	QTY	REMARKS
							VERTICAL ORIENTATION

SSTEELCOAT® 60° ELBOW - 4 GORE