VI-A-DUC®

PVC Duct Fittings and Specifications

VIRON®
INTERNATIONAL
CORPORATION

989-723-8255

Complete System Solutions for Moving Corrosive Air

www.vironintl.com

VI-A-DUC® PVC DUCT & FITTINGS

VIRON® has grown to become a leader in designing and manufacturing Corrosion Resistant Air Scrubbers, Fans, and Exhaust Duct. Our personnel consists of a sales staff and application engineers who are well known and highly regarded in the industry. Many of our duct products hold manufacturing certificates, including low flame/smoke "Viro-Duc®" certified by Factory Mutual, a highly corrosion resistant duct certified by the ICBO, and a PVC fume exhaust duct "VI-A-DUC®" certified by Factory Mutual.

When you buy from **VIRON®**, you are buying a proven, field tested product from a company with over thirty (30) years of manufacturing expertise.

VIRON® is sincerely interested in working with your engineers to solve your exhaust and scrubber corrosion problems.

CAPACITY - VIRON's 40,000 square feet Manufacturing Facility can produce over a half million pounds of PVC duct and fittings annually. The company consistently fabricates duct and complete duct systems for many applications where corrosion is a major problem.

EXPERIENCE - VIRON® has been in business for over thirty (30) years. All of this experience has been as manufacturers of Corrosion Resistant Plastic Duct. Our management team has over 160 years of combined experience working at **VIRON®** alone. Our experience is unparalleled in this industry, and that experience will pay dividends on your projects.

DESIGN - VIRON® utilizes Intergraph Computer Assisted Drafting and Design (CADD) equipment. This leading edge technology is compatible with most major engineering houses, where workstation machines are the standard. We can interface with our smallest client to our largest.

MANUFACTURING - VIRON® manufactures its duct to rigid quality standards. Through the use of our computer controlled butt welding and bending machines, we can manufacture to exact material thicknesses and dimensional data.

DELIVERY - Our customers are NUMBER ONE. We have made the commitment to react to every customer's delivery needs. This commitment has allowed **VIRON®** to maintain a constant flow of repeat business. Our customers know if they need the delivery, we will accommodate them.

QUALITY - Quality is the cornerstone of **VIRON**'s philosophy. "FQ" *First Quality* is **VIRON**'s commitment to our customers, which has led us into a dominant industry position today and into the 21st century.

VI-A-DUC®

PVC FUME EXHAUST DUCT

Factory Mutual System

Approved

VIRON® uses "PVC" sheet in its *FM Approved* fume duct. The PVC Sheet systems have been pre-Approved by FM for use as a basic component in the manufacture of Fume Exhaust Ducts installed without internal fire sprinklers.

VIRON® has been approved by Factory Mutual Research Corporation as a manufacturer of PVC "Fume Exhaust Duct". The material was also tested in accordance with ASTM E-84:

Flame Spread Rating 14
Smoke Development Rating 754

SELECTION GUIDE

VIRON® MODEL CODE **VVD — ST02 — 004**

VIRON® PVC DUCT

DUCT OR FITTING MODEL

DUCT OR FITTING DIAMETER

A DIAMETER	L DUCT LENGTH FEET	DUCT THICKNESS
4	2	0.125
6	2	0.125
8	2	0.125
10	2	0.125
12	2	0.125
14	4	0.125
16	8	0.125
18	8	0.125
20	8	0.125
22	8	0.125
24	8	0.187
26	8	0.187
28	8	0.187
30	8	0.187
32	8	0.187
34	8	0.187
36	8	0.187
38	8	0.187
40	8	0.187
42	8	0.250
44	8	0.250
46	8	0.250
48	8	0.250
50	8	0.250
52	8	0.250
54	8	0.250
56	8	0.250
58	8	0.250
60	8	0.250
72	8	0.250

STRAIGHT DUCT

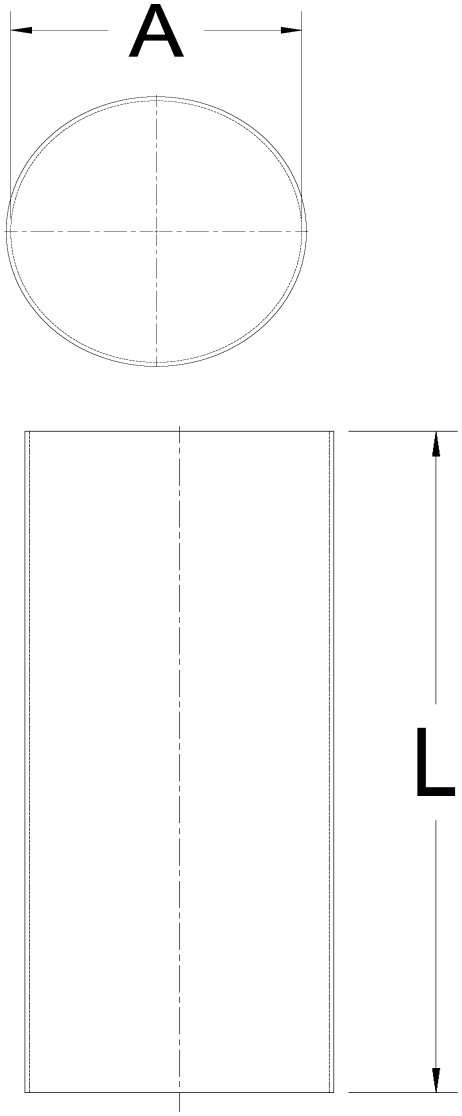

NOTE: VIRON® WILL MANUFACTURE THE PVC DUCT AND FITTINGS TO THE STANDARD THICKNESSES SEE PAGE 27 FOR DUCT VACUUM AND PRESSURE RATINGS. IF OTHER THAN STANDARD DESIGN RATINGS ARE REQUIRED, PLEASE CONSULT THE FACTORY.

90 DEGREE ELBOW

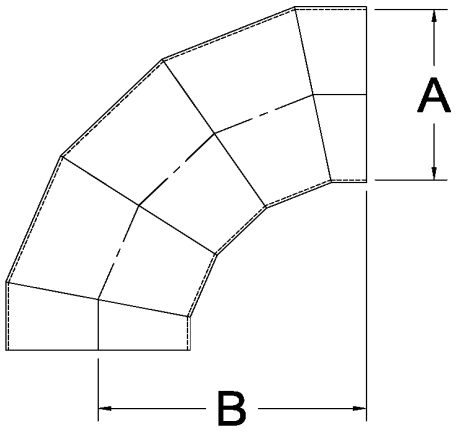

(5) GORE ELBOW

B RADIUS	DUCT THICKNESS	A DIAMETER	B RADIUS	DUCT THICKNESS
6	0.125	4	6	0.125
9	0.125	6	9	0.125
12	0.125	8	12	0.125
15	0.125	10	15	0.125
18	0.125	12	18	0.125
21	0.125	14	21	0.125
		1		
24	0.125	16	24	0.125
27	0.125	18	27	0.125
30	0.125	20	30	0.125
33	0.125	22	33	0.125
36	0.187	24	36	0.187
39	0.187	26	39	0.187
42	0.187	28	42	0.187
45	0.187	30	45	0.187
48	0.187	32	48	0.187
51	0.187	34	51	0.187
54	0.187	36	54	0.187
57	0.187	38	57	0.187
60	0.187	40	60	0.187
63	0.250	42	63	0.250
66	0.250	44	66	0.250
69	0.250	46	69	0.250
72	0.250	48	72	0.250
75	0.250	50	75	0.250
78	0.250	52	78	0.250
81	0.250	54	81	0.250
84	0.250	56	84	0.250
87	0.250	58	87	0.250
90	0.250	60	90	0.250
108	0.250	72	108	0.250

NOTE 1) STANDARD SIZE ELBOW RADIUS SHOWN ABOVE
2) VIRON CAN MANUFACTURE THE ELBOW FITTINGS TO ANY RADIUS LENGTH

60 DEGREE ELBOW

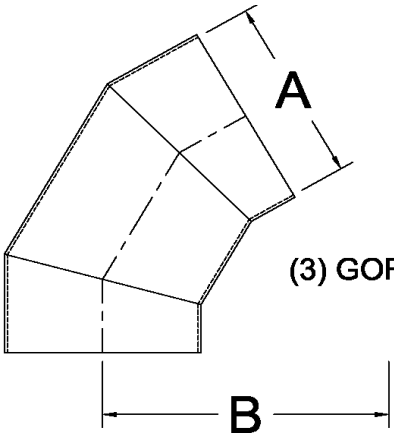

(3) GORE ELBOW

A DIAMETER	B RADIUS	DUCT THICKNESS
4	6	0.125
6	9	0.125
8	12	0.125
10	15	0.125
12	18	0.125
14	21	0.125
16	24	0.125
18	27	0.125
20	30	0.125
22	33	0.125
24	36	0.187
26	39	0.187
28	42	0.187
30	45	0.187
32	48	0.187
34	51	0.187
36	54	0.187
38	57	0.187
40	60	0.187
42	63	0.250
44	66	0.250
46	69	0.250
48	72	0.250
50	75	0.250
52	78	0.250
54	81	0.250
56	84	0.250
58	87	0.250
60	90	0.250
72	108	0.250

NOTE 1) STANDARD SIZE ELBOW RADIUS SHOWN ABOVE
2) VIRON CAN MANUFACTURE THE ELBOW FITTINGS TO ANY RADIUS LENGTH

45 DEGREE ELBOW

A DIAMETER	B RADIUS	DUCT THICKNESS
4	6	0.125
6	9	0.125
8	12	0.125
10	15	0.125
12	18	0.125
14	21	0.125
16	24	0.125
18	27	0.125
20	30	0.125
22	33	0.125
24	36	0.187
26	39	0.187
28	42	0.187
30	45	0.187
32	48	0.187
34	51	0.187
36	54	0.187
38	57	0.187
40	60	0.187
42	63	0.250
44	66	0.250
46	69	0.250
48	72	0.250
50	75	0.250
52	78	0.250
54	81	0.250
56	84	0.250
58	87	0.250
60	90	0.250
72	108	0.250

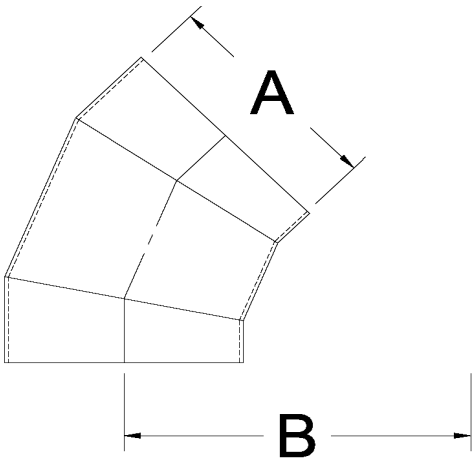

(3) GORE ELBOW

NOTE 1) STANDARD SIZE ELBOW RADIUS SHOWN ABOVE
2) VIRON CAN MANUFACTURE THE ELBOW FITTINGS TO ANY RADIUS LENGTH

30 DEGREE ELBOW

A DIAMETER	B RADIUS	DUCT THICKNESS
4	6	0.125
6	9	0.125
8	12	0.125
10	15	0.125
12	18	0.125
14	21	0.125
16	24	0.125
18	27	0.125
20	30	0.125
22	33	0.125
24	36	0.187
26	39	0.187
28	42	0.187
30	45	0.187
32	48	0.187
34	51	0.187
36	54	0.187
38	57	0.187
40	60	0.187
42	63	0.250
44	66	0.250
46	69	0.250
48	72	0.250
50	75	0.250
52	78	0.250
54	81	0.250
56	84	0.250
58	87	0.250
60	90	0.250
72	108	0.250

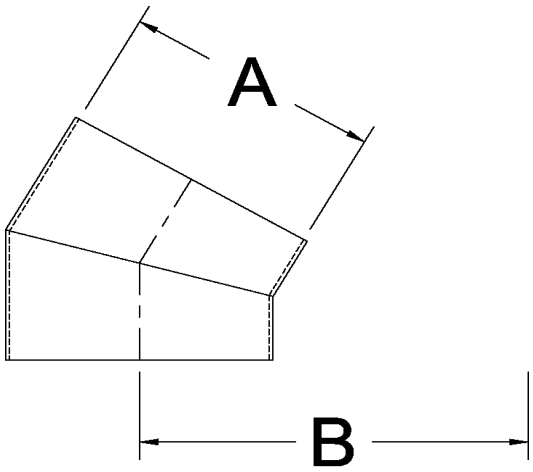

(2) GORE ELBOW

NOTE 1) STANDARD SIZE ELBOW RADIUS SHOWN ABOVE
2) VIRON CAN MANUFACTURE THE ELBOW FITTINGS TO ANY RADIUS LENGTH

90 DEGREE ELBOW WITH HEEL TAP

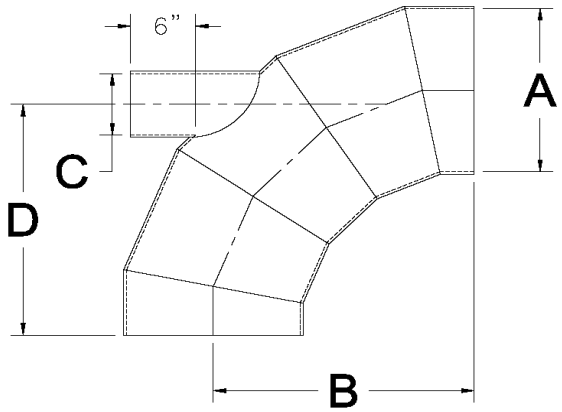

(5) GORE ELBOW

A DIAMETER	B RADIUS	C DIAMETER	D LENGTH	DUCT THICKNESS
4	6	A.S.	5.656	0.125
6	9	A.S.	8.484	0.125
8	12	A.S.	11.312	0.125
10	15	A.S.	14.140	0.125
12	18	A.S.	16.968	0.125
14	21	A.S.	19.796	0.125
16	24	A.S.	22.624	0.125
18	27	A.S.	25.452	0.125
20	30	A.S.	28.280	0.125
22	33	A.S.	31.108	0.125
24	36	A.S.	33.936	0.187
26	39	A.S.	36.764	0.187
28	42	A.S.	39.592	0.187
30	45	A.S.	42.420	0.187
32	48	A.S.	45.248	0.187
34	51	A.S.	48.076	0.187
36	54	A.S.	50.904	0.187
38	57	A.S.	53.732	0.187
40	60	A.S.	56.560	0.187
42	63	A.S.	59.388	0.250
44	66	A.S.	62.216	0.250
46	69	A.S.	65.044	0.250
48	72	A.S.	67.872	0.250
50	75	A.S.	70.700	0.250
52	78	A.S.	73.528	0.250
54	81	A.S.	76.356	0.250
56	84	A.S.	79.184	0.250
58	87	A.S.	82.012	0.250
60	90	A.S.	84.840	0.250
72	108	A.S.	101.808	0.250

NOTE 1) A.S. MEANS ANY SIZE EQUAL TO OR LESS THAN A
2) STANDARD SIZE ELBOW RADIUS SHOWN ABOVE
3) VIRON CAN MANUFACTURE THE ELBOW FITTINGS TO ANY RADIUS LENGTH

90 DEGREE TEE

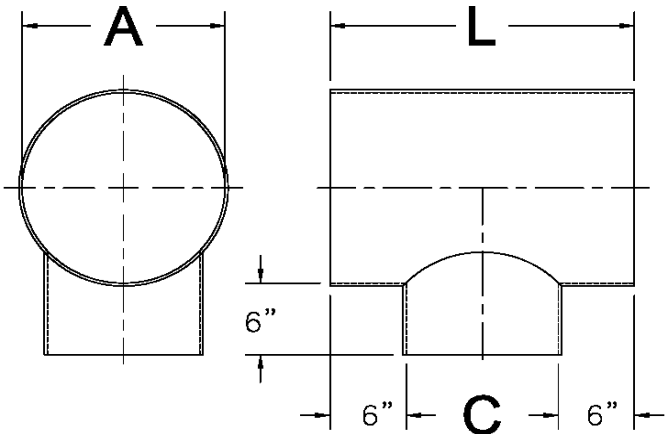

A DIAMETER	L LENGTH	C DIAMETER	DUCT THICKNESS
4	C + 12	A.S.	0.125
6	C + 12	A.S.	0.125
8	C + 12	A.S.	0.125
10	C + 12	A.S.	0.125
12	C + 12	A.S.	0.125
14	C + 12	A.S.	0.125
16	C + 12	A.S.	0.125
18	C + 12	A.S.	0.125
20	C + 12	A.S.	0.125
22	C + 12	A.S.	0.125
24	C + 12	A.S.	0.187
26	C + 12	A.S.	0.187
28	C + 12	A.S.	0.187
30	C + 12	A.S.	0.187
32	C + 12	A.S.	0.187
34	C + 12	A.S.	0.187
36	C + 12	A.S.	0.187
38	C + 12	A.S.	0.187
40	C + 12	A.S.	0.187
42	C + 12	A.S.	0.250
44	C + 12	A.S.	0.250
46	C + 12	A.S.	0.250
48	C + 12	A.S.	0.250
50	C + 12	A.S.	0.250
52	C + 12	A.S.	0.250
54	C + 12	A.S.	0.250
56	C + 12	A.S.	0.250
58	C + 12	A.S.	0.250
60	C + 12	A.S.	0.250
72	C + 12	A.S.	0.250

NOTE 1) A.S. MEANS ANY SIZE EQUAL TO OR LESS THAN A

90 DEGREE BOOT TEE

A DIAMETER	L LENGTH	C DIAMETER	DUCT THICKNESS
4	C + 18	A.S.	0.125
6	C + 18	A.S.	0.125
8	C + 18	A.S.	0.125
10	C + 18	A.S.	0.125
12	C + 18	A.S.	0.125
14	C + 18	A.S.	0.125
16	C + 18	A.S.	0.125
18	C + 18	A.S.	0.125
20	C + 18	A.S.	0.125
22	C + 18	A.S.	0.125
24	C + 18	A.S.	0.187
26	C + 18	A.S.	0.187
28	C + 18	A.S.	0.187
30	C + 18	A.S.	0.187
32	C + 18	A.S.	0.187
34	C + 18	A.S.	0.187
36	C + 18	A.S.	0.187
38	C + 18	A.S.	0.187
40	C + 18	A.S.	0.187
42	C + 18	A.S.	0.250
44	C + 18	A.S.	0.250
46	C + 18	A.S.	0.250
48	C + 18	A.S.	0.250
50	C + 18	A.S.	0.250
52	C + 18	A.S.	0.250
54	C + 18	A.S.	0.250
56	C + 18	A.S.	0.250
58	C + 18	A.S.	0.250
60	C + 18	A.S.	0.250
72	C + 18	A.S.	0.250

NOTE A.S. MEANS ANY SIZE LESS THAN A

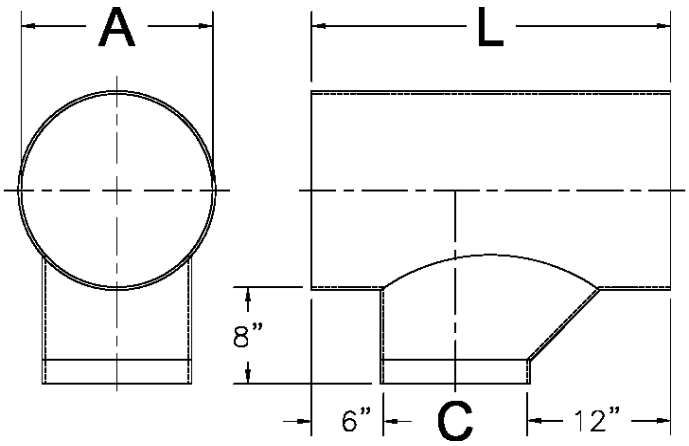

90 DEGREE REDUCING TEE

A DIAMETER	L LENGTH	C DIAMETER	D LENGTH	E DIAMETER	DUCT THICKNESS
4	C + 12	A.S.	(A-E)5	A.S.	0.125
6	C + 12	A.S.	(A-E)5	A.S.	0.125
8	C + 12	A.S.	(A-E)5	A.S.	0.125
10	C + 12	A.S.	(A-E)5	A.S.	0.125
12	C + 12	A.S.	(A-E)5	A.S.	0.125
14	C + 12	A.S.	(A-E)5	A.S.	0.125
16	C + 12	A.S.	(A-E)5	A.S.	0.125
18	C + 12	A.S.	(A-E)5	A.S.	0.125
20	C + 12	A.S.	(A-E)5	A.S.	0.125
22	C + 12	A.S.	(A-E)5	A.S.	0.125
24	C + 12	A.S.	(A-E)5	A.S.	0.187
26	C + 12	A.S.	(A-E)5	A.S.	0.187
28	C + 12	A.S.	(A-E)5	A.S.	0.187
30	C + 12	A.S.	(A-E)5	A.S.	0.187
32	C + 12	A.S.	(A-E)5	A.S.	0.187
34	C + 12	A.S.	(A-E)5	A.S.	0.187
36	C + 12	A.S.	(A-E)5	A.S.	0.187
38	C + 12	A.S.	(A-E)5	A.S.	0.187
40	C + 12	A.S.	(A-E)5	A.S.	0.187
42	C + 12	A.S.	(A-E)5	A.S.	0.250
44	C + 12	A.S.	(A-E)5	A.S.	0.250
46	C + 12	A.S.	(A-E)5	A.S.	0.250
48	C + 12	A.S.	(A-E)5	A.S.	0.250
50	C + 12	A.S.	(A-E)5	A.S.	0.250
52	C + 12	A.S.	(A-E)5	A.S.	0.250
54	C + 12	A.S.	(A-E)5	A.S.	0.250
56	C + 12	A.S.	(A-E)5	A.S.	0.250
58	C + 12	A.S.	(A-E)5	A.S.	0.250
60	C + 12	A.S.	(A-E)5	A.S.	0.250
72	C + 12	A.S.	(A-E)5	A.S.	0.250

NOTE A.S. MEANS ANY SIZE EQUAL TO OR LESS THAN A

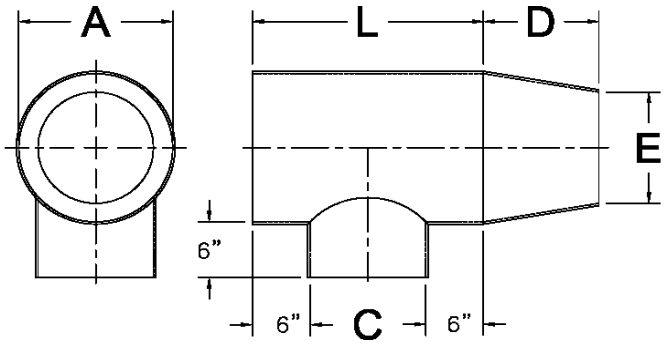

90 DEGREE BOOT TEE WITH REDUCER

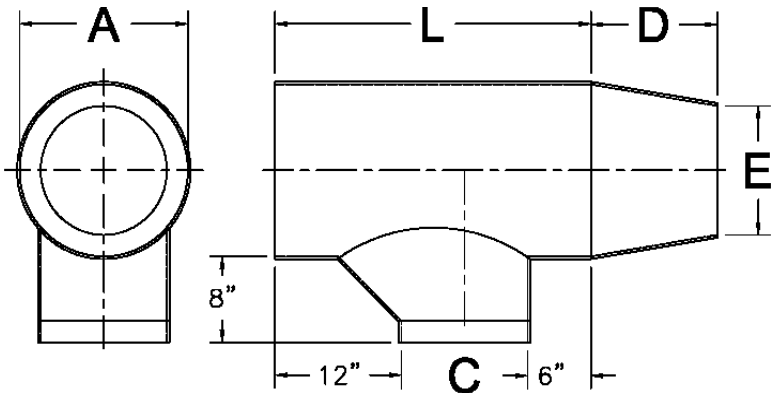

A DIAMETER	L LENGTH	C DIAMETER	D LENGTH	E DIAMETER	DUCT THICKNESS
4	C + 18	A.S.	(A-E)5	A.S.	0.125
6	C + 18	A.S.	(A-E)5	A.S.	0.125
8	C + 18	A.S.	(A-E)5	A.S.	0.125
10	C + 18	A.S.	(A-E)5	A.S.	0.125
12	C + 18	A.S.	(A-E)5	A.S.	0.125
14	C + 18	A.S.	(A-E)5	A.S.	0.125
16	C + 18	A.S.	(A-E)5	A.S.	0.125
18	C + 18	A.S.	(A-E)5	A.S.	0.125
20	C + 18	A.S.	(A-E)5	A.S.	0.125
22	C + 18	A.S.	(A-E)5	A.S.	0.125
24	C + 18	A.S.	(A-E)5	A.S.	0.187
26	C + 18	A.S.	(A-E)5	A.S.	0.187
28	C + 18	A.S.	(A-E)5	A.S.	0.187
30	C + 18	A.S.	(A-E)5	A.S.	0.187
32	C + 18	A.S.	(A-E)5	A.S.	0.187
34	C + 18	A.S.	(A-E)5	A.S.	0.187
36	C + 18	A.S.	(A-E)5	A.S.	0.187
38	C + 18	A.S.	(A-E)5	A.S.	0.187
40	C + 18	A.S.	(A-E)5	A.S.	0.187
42	C + 18	A.S.	(A-E)5	A.S.	0.250
44	C + 18	A.S.	(A-E)5	A.S.	0.250
46	C + 18	A.S.	(A-E)5	A.S.	0.250
48	C + 18	A.S.	(A-E)5	A.S.	0.250
50	C + 18	A.S.	(A-E)5	A.S.	0.250
52	C + 18	A.S.	(A-E)5	A.S.	0.250
54	C + 18	A.S.	(A-E)5	A.S.	0.250
56	C + 18	A.S.	(A-E)5	A.S.	0.250
58	C + 18	A.S.	(A-E)5	A.S.	0.250
60	C + 18	A.S.	(A-E)5	A.S.	0.250
72	C + 18	A.S.	(A-E)5	A.S.	0.250

NOTE A.S. MEANS ANY SIZE LESS THAN A

180 DEGREE CROSS

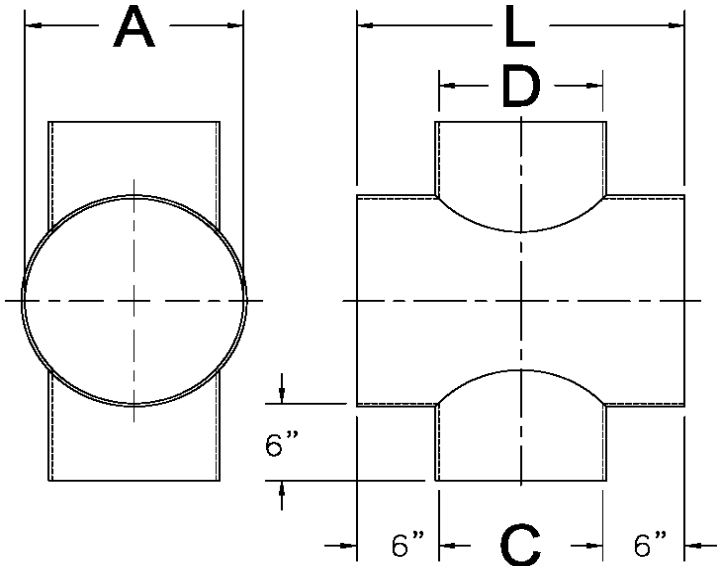

A DIAMETER	L LENGTH	C DIAMETER	D DIAMETER	DUCT THICKNESS
4	C + 12	A.S.	A.S.	0.125
6	C + 12	A.S.	A.S.	0.125
8	C + 12	A.S.	A.S.	0.125
10	C + 12	A.S.	A.S.	0.125
12	C + 12	A.S.	A.S.	0.125
14	C + 12	A.S.	A.S.	0.125
16	C + 12	A.S.	A.S.	0.125
18	C + 12	A.S.	A.S.	0.125
20	C + 12	A.S.	A.S.	0.125
22	C + 12	A.S.	A.S.	0.125
24	C + 12	A.S.	A.S.	0.187
26	C + 12	A.S.	A.S.	0.187
28	C + 12	A.S.	A.S.	0.187
30	C + 12	A.S.	A.S.	0.187
32	C + 12	A.S.	A.S.	0.187
34	C + 12	A.S.	A.S.	0.187
36	C + 12	A.S.	A.S.	0.187
38	C + 12	A.S.	A.S.	0.187
40	C + 12	A.S.	A.S.	0.187
42	C + 12	A.S.	A.S.	0.250
44	C + 12	A.S.	A.S.	0.250
46	C + 12	A.S.	A.S.	0.250
48	C + 12	A.S.	A.S.	0.250
50	C + 12	A.S.	A.S.	0.250
52	C + 12	A.S.	A.S.	0.250
54	C + 12	A.S.	A.S.	0.250
56	C + 12	A.S.	A.S.	0.250
58	C + 12	A.S.	A.S.	0.250
60	C + 12	A.S.	A.S.	0.250
72	C + 12	A.S.	A.S.	0.250

NOTE 1) A.S. MEANS ANY SIZE EQUAL TO OR LESS THAN A

2) C IS GREATER THAN, LESS THAN, OR EQUAL TO D

135 DEGREE CROSS

A DIAMETER	L LENGTH	C DIAMETER	D DIAMETER	DUCT THICKNESS
4	C + 12	A.S.	A.S.	0.125
6	C + 12	A.S.	A.S.	0.125
8	C + 12	A.S.	A.S.	0.125
10	C + 12	A.S.	A.S.	0.125
12	C + 12	A.S.	A.S.	0.125
14	C + 12	A.S.	A.S.	0.125
16	C + 12	A.S.	A.S.	0.125
18	C + 12	A.S.	A.S.	0.125
20	C + 12	A.S.	A.S.	0.125
22	C + 12	A.S.	A.S.	0.125
24	C + 12	A.S.	A.S.	0.187
26	C + 12	A.S.	A.S.	0.187
28	C + 12	A.S.	A.S.	0.187
30	C + 12	A.S.	A.S.	0.187
32	C + 12	A.S.	A.S.	0.187
34	C + 12	A.S.	A.S.	0.187
36	C + 12	A.S.	A.S.	0.187
38	C + 12	A.S.	A.S.	0.187
40	C + 12	A.S.	A.S.	0.187
42	C + 12	A.S.	A.S.	0.250
44	C + 12	A.S.	A.S.	0.250
46	C + 12	A.S.	A.S.	0.250
48	C + 12	A.S.	A.S.	0.250
50	C + 12	A.S.	A.S.	0.250
52	C + 12	A.S.	A.S.	0.250
54	C + 12	A.S.	A.S.	0.250
56	C + 12	A.S.	A.S.	0.250
58	C + 12	A.S.	A.S.	0.250
60	C + 12	A.S.	A.S.	0.250
72	C + 12	A.S.	A.S.	0.250

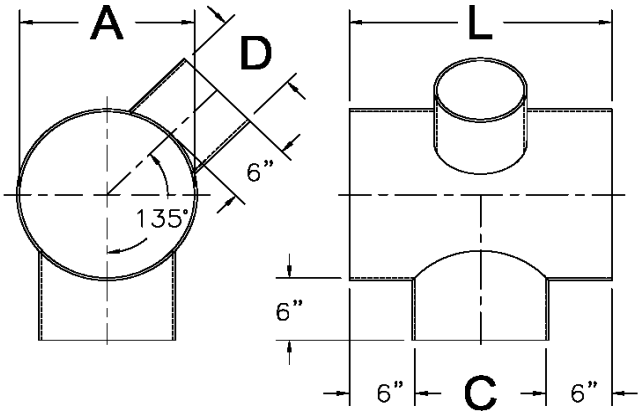

NOTE 1) A.S. MEANS ANY SIZE EQUAL TO OR LESS THAN A
2) C CAN BE GREATER THAN, LESS THAN, OR EQUAL TO D

90 DEGREE CROSS

A DIAMETER	L LENGTH	C DIAMETER	D DIAMETER	DUCT THICKNESS
4	C + 12	A.S.	A.S.	0.125
6	C + 12	A.S.	A.S.	0.125
8	C + 12	A.S.	A.S.	0.125
10	C + 12	A.S.	A.S.	0.125
12	C + 12	A.S.	A.S.	0.125
14	C + 12	A.S.	A.S.	0.125
16	C + 12	A.S.	A.S.	0.125
18	C + 12	A.S.	A.S.	0.125
20	C + 12	A.S.	A.S.	0.125
22	C + 12	A.S.	A.S.	0.125
24	C + 12	A.S.	A.S.	0.187
26	C + 12	A.S.	A.S.	0.187
28	C + 12	A.S.	A.S.	0.187
30	C + 12	A.S.	A.S.	0.187
32	C + 12	A.S.	A.S.	0.187
34	C + 12	A.S.	A.S.	0.187
36	C + 12	A.S.	A.S.	0.187
38	C + 12	A.S.	A.S.	0.187
40	C + 12	A.S.	A.S.	0.187
42	C + 12	A.S.	A.S.	0.250
44	C + 12	A.S.	A.S.	0.250
46	C + 12	A.S.	A.S.	0.250
48	C + 12	A.S.	A.S.	0.250
50	C + 12	A.S.	A.S.	0.250
52	C + 12	A.S.	A.S.	0.250
54	C + 12	A.S.	A.S.	0.250
56	C + 12	A.S.	A.S.	0.250
58	C + 12	A.S.	A.S.	0.250
60	C + 12	A.S.	A.S.	0.250
72	C + 12	A.S.	A.S.	0.250

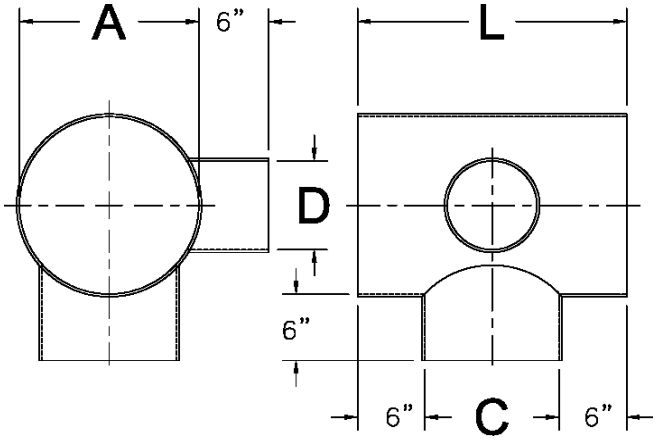

NOTE 1) A.S. MEANS ANY SIZE EQUAL TO OR LESS THAN A
2) C CAN BE GREATER THAN, LESS THAN, OR EQUAL TO D

45 DEGREE WYE

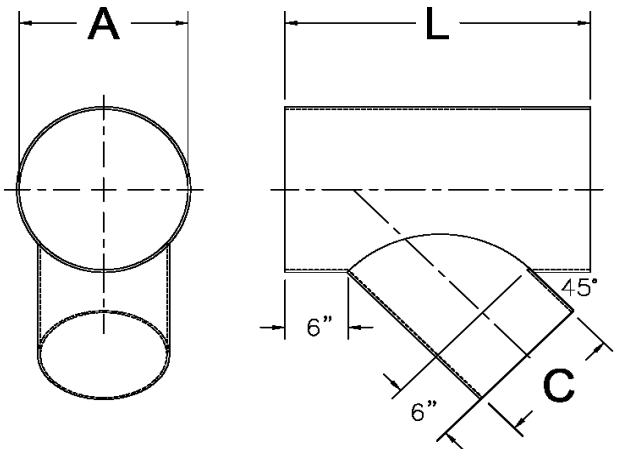

A DIAMETER	L LENGTH	C DIAMETER	DUCT THICKNESS
4	1.414C + 12	A.S.	0.125
6	1.414C + 12	A.S.	0.125
8	1.414C + 12	A.S.	0.125
10	1.414C + 12	A.S.	0.125
12	1.414C + 12	A.S.	0.125
14	1.414C + 12	A.S.	0.125
16	1.414C + 12	A.S.	0.125
18	1.414C + 12	A.S.	0.125
20	1.414C + 12	A.S.	0.125
22	1.414C + 12	A.S.	0.125
24	1.414C + 12	A.S.	0.187
26	1.414C + 12	A.S.	0.187
28	1.414C + 12	A.S.	0.187
30	1.414C + 12	A.S.	0.187
32	1.414C + 12	A.S.	0.187
34	1.414C + 12	A.S.	0.187
36	1.414C + 12	A.S.	0.187
38	1.414C + 12	A.S.	0.187
40	1.414C + 12	A.S.	0.187
42	1.414C + 12	A.S.	0.250
44	1.414C + 12	A.S.	0.250
46	1.414C + 12	A.S.	0.250
48	1.414C + 12	A.S.	0.250
50	1.414C + 12	A.S.	0.250
52	1.414C + 12	A.S.	0.250
54	1.414C + 12	A.S.	0.250
56	1.414C + 12	A.S.	0.250
58	1.414C + 12	A.S.	0.250
60	1.414C + 12	A.S.	0.250
72	1.414C + 12	A.S.	0.250

NOTE A.S. MEANS ANY SIZE LESS THAN A

45 DEGREE DOUBLE WYE

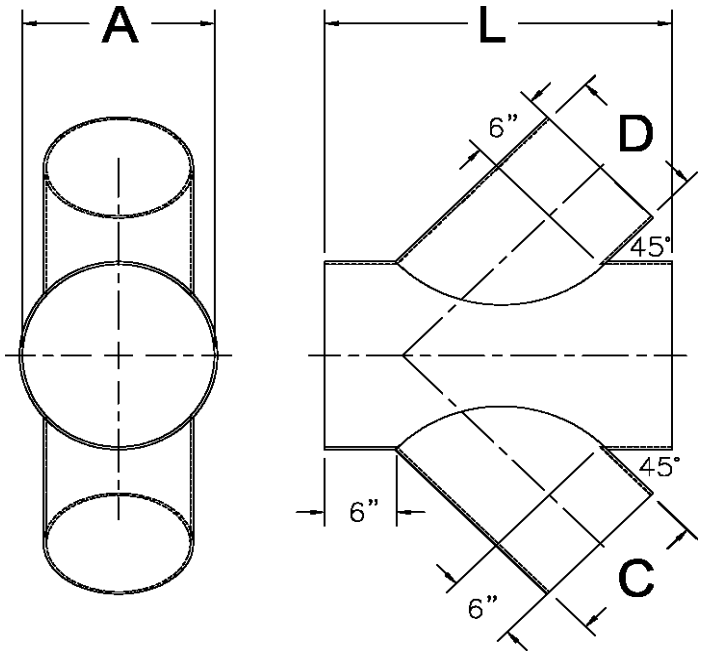

A DIAMETER	L LENGTH	C DIAMETER	D DIAMETER	DUCT THICKNESS
4	1.414C + 12	A.S.	A.S.	0.125
6	1.414C + 12	A.S.	A.S.	0.125
8	1.414C + 12	A.S.	A.S.	0.125
10	1.414C + 12	A.S.	A.S.	0.125
12	1.414C + 12	A.S.	A.S.	0.125
14	1.414C + 12	A.S.	A.S.	0.125
16	1.414C + 12	A.S.	A.S.	0.125
18	1.414C + 12	A.S.	A.S.	0.125
20	1.414C + 12	A.S.	A.S.	0.125
22	1.414C + 12	A.S.	A.S.	0.125
24	1.414C + 12	A.S.	A.S.	0.187
26	1.414C + 12	A.S.	A.S.	0.187
28	1.414C + 12	A.S.	A.S.	0.187
30	1.414C + 12	A.S.	A.S.	0.187
32	1.414C + 12	A.S.	A.S.	0.187
34	1.414C + 12	A.S.	A.S.	0.187
36	1.414C + 12	A.S.	A.S.	0.187
38	1.414C + 12	A.S.	A.S.	0.187
40	1.414C + 12	A.S.	A.S.	0.187
42	1.414C + 12	A.S.	A.S.	0.250
44	1.414C + 12	A.S.	A.S.	0.250
46	1.414C + 12	A.S.	A.S.	0.250
48	1.414C + 12	A.S.	A.S.	0.250
50	1.414C + 12	A.S.	A.S.	0.250
52	1.414C + 12	A.S.	A.S.	0.250
54	1.414C + 12	A.S.	A.S.	0.250
56	1.414C + 12	A.S.	A.S.	0.250
58	1.414C + 12	A.S.	A.S.	0.250
60	1.414C + 12	A.S.	A.S.	0.250
72	1.414C + 12	A.S.	A.S.	0.250

NOTE 1) A.S. MEANS ANY SIZE LESS THAN A
2) C IS GREATER THAN, LESS THAN, OR EQUAL TO D

45 DEGREE REDUCING WYE

A DIAMETER	L LENGTH	C DIAMETER	D DIAMETER	DUCT THICKNESS
4		A.S.	A.S.	0.125
6		A.S.	A.S.	0.125
8		A.S.	A.S.	0.125
10		A.S.	A.S.	0.125
12		A.S.	A.S.	0.125
14		A.S.	A.S.	0.125
16		A.S.	A.S.	0.125
18		A.S.	A.S.	0.125
20		A.S.	A.S.	0.125
22		A.S.	A.S.	0.125
24		A.S.	A.S.	0.187
26		A.S.	A.S.	0.187
28		A.S.	A.S.	0.187
30		A.S.	A.S.	0.187
32		A.S.	A.S.	0.187
34		A.S.	A.S.	0.187
36		A.S.	A.S.	0.187
38		A.S.	A.S.	0.187
40		A.S.	A.S.	0.187
42		A.S.	A.S.	0.250
44		A.S.	A.S.	0.250
46		A.S.	A.S.	0.250
48		A.S.	A.S.	0.250
50		A.S.	A.S.	0.250
52		A.S.	A.S.	0.250
54		A.S.	A.S.	0.250
56		A.S.	A.S.	0.250
58		A.S.	A.S.	0.250
60		A.S.	A.S.	0.250
72		A.S.	A.S.	0.250

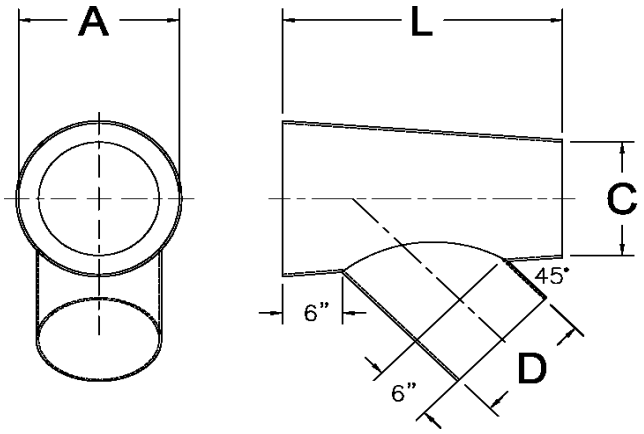

NOTE 1) A.S. MEANS ANY SIZE LESS THAN A
2) L EQUALS [5(A-C)] OR (1.414D + 12") WHICHEVER IS LONGER

45 DEGREE DOUBLE REDUCING WYE

A DIAMETER	L LENGTH	C DIAMETER	D DIAMETER	E DIAMETER	DUCT THICKNESS
4		A.S.	A.S.	A.S.	0.125
6		A.S.	A.S.	A.S.	0.125
8		A.S.	A.S.	A.S.	0.125
10		A.S.	A.S.	A.S.	0.125
12		A.S.	A.S.	A.S.	0.125
14		A.S.	A.S.	A.S.	0.125
16		A.S.	A.S.	A.S.	0.125
18		A.S.	A.S.	A.S.	0.125
20		A.S.	A.S.	A.S.	0.125
22		A.S.	A.S.	A.S.	0.125
24		A.S.	A.S.	A.S.	0.187
26		A.S.	A.S.	A.S.	0.187
28		A.S.	A.S.	A.S.	0.187
30		A.S.	A.S.	A.S.	0.187
32		A.S.	A.S.	A.S.	0.187
34		A.S.	A.S.	A.S.	0.187
36		A.S.	A.S.	A.S.	0.187
38		A.S.	A.S.	A.S.	0.187
40		A.S.	A.S.	A.S.	0.187
42		A.S.	A.S.	A.S.	0.250
44		A.S.	A.S.	A.S.	0.250
46		A.S.	A.S.	A.S.	0.250
48		A.S.	A.S.	A.S.	0.250
50		A.S.	A.S.	A.S.	0.250
52		A.S.	A.S.	A.S.	0.250
54		A.S.	A.S.	A.S.	0.250
56		A.S.	A.S.	A.S.	0.250
58		A.S.	A.S.	A.S.	0.250
60		A.S.	A.S.	A.S.	0.250
72		A.S.	A.S.	A.S.	0.250

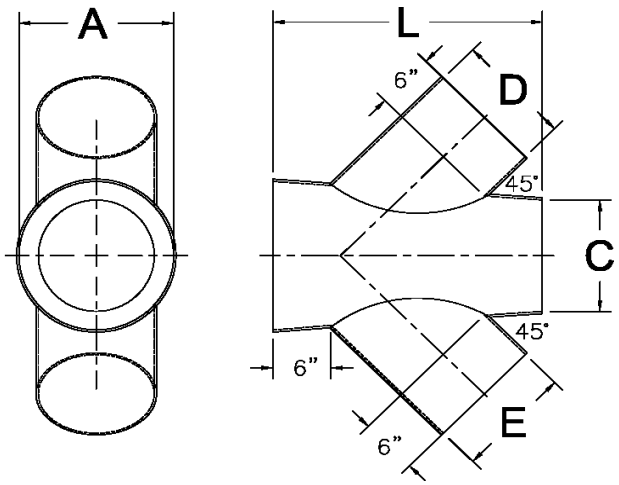

NOTE 1) A.S. MEANS ANY SIZE LESS THAN A
2) D CAN BE GREATER THAN, LESS THAN, OR EQUAL TO E
3) L EQUALS [5(A-C)] OR (1.414D + 12") WHICHEVER IS LONGER

30 DEGREE WYE

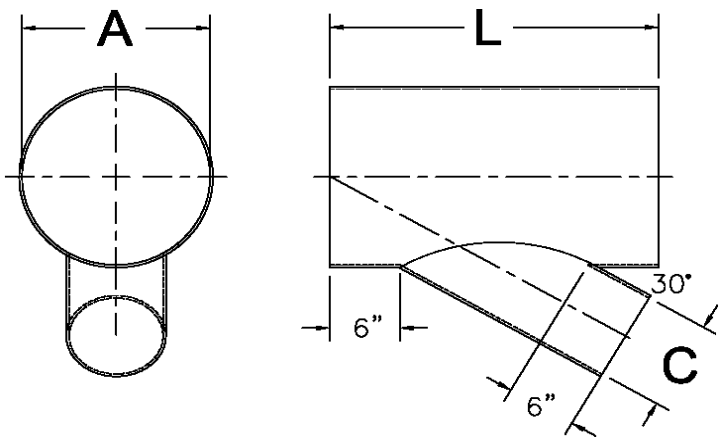

A DIAMETER	L LENGTH	C DIAMETER	DUCT THICKNESS
4	2C + 12	A.S.	0.125
6	2C + 12	A.S.	0.125
8	2C + 12	A.S.	0.125
10	2C + 12	A.S.	0.125
12	2C + 12	A.S.	0.125
14	2C + 12	A.S.	0.125
16	2C + 12	A.S.	0.125
18	2C + 12	A.S.	0.125
20	2C + 12	A.S.	0.125
22	2C + 12	A.S.	0.125
24	2C + 12	A.S.	0.187
26	2C + 12	A.S.	0.187
28	2C + 12	A.S.	0.187
30	2C + 12	A.S.	0.187
32	2C + 12	A.S.	0.187
34	2C + 12	A.S.	0.187
36	2C + 12	A.S.	0.187
38	2C + 12	A.S.	0.187
40	2C + 12	A.S.	0.187
42	2C + 12	A.S.	0.250
44	2C + 12	A.S.	0.250
46	2C + 12	A.S.	0.250
48	2C + 12	A.S.	0.250
50	2C + 12	A.S.	0.250
52	2C + 12	A.S.	0.250
54	2C + 12	A.S.	0.250
56	2C + 12	A.S.	0.250
58	2C + 12	A.S.	0.250
60	2C + 12	A.S.	0.250
72	2C + 12	A.S.	0.250

NOTE A.S. MEANS ANY SIZE LESS THAN A

30 DEGREE DOUBLE WYE

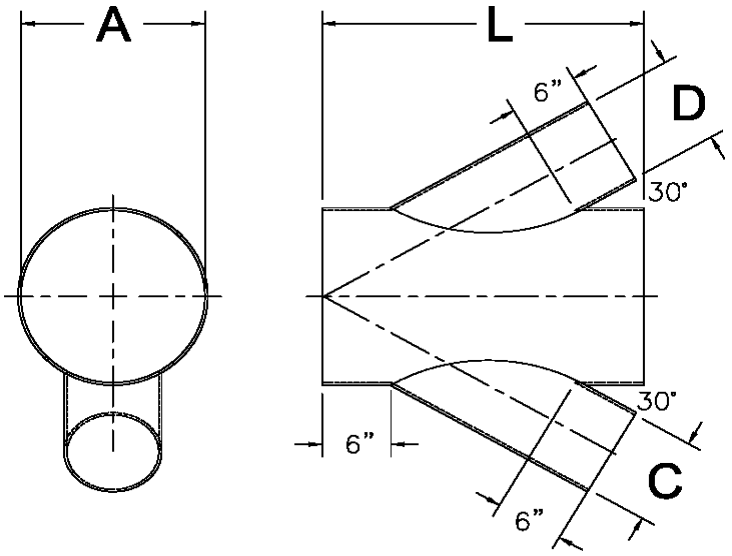

A DIAMETER	L LENGTH	C DIAMETER	D DIAMETER	DUCT THICKNESS
4	2C + 12	A.S.	A.S.	0.125
6	2C + 12	A.S.	A.S.	0.125
8	2C + 12	A.S.	A.S.	0.125
10	2C + 12	A.S.	A.S.	0.125
12	2C + 12	A.S.	A.S.	0.125
14	2C + 12	A.S.	A.S.	0.125
16	2C + 12	A.S.	A.S.	0.125
18	2C + 12	A.S.	A.S.	0.125
20	2C + 12	A.S.	A.S.	0.125
22	2C + 12	A.S.	A.S.	0.125
24	2C + 12	A.S.	A.S.	0.187
26	2C + 12	A.S.	A.S.	0.187
28	2C + 12	A.S.	A.S.	0.187
30	2C + 12	A.S.	A.S.	0.187
32	2C + 12	A.S.	A.S.	0.187
34	2C + 12	A.S.	A.S.	0.187
36	2C + 12	A.S.	A.S.	0.187
38	2C + 12	A.S.	A.S.	0.187
40	2C + 12	A.S.	A.S.	0.187
42	2C + 12	A.S.	A.S.	0.250
44	2C + 12	A.S.	A.S.	0.250
46	2C + 12	A.S.	A.S.	0.250
48	2C + 12	A.S.	A.S.	0.250
50	2C + 12	A.S.	A.S.	0.250
52	2C + 12	A.S.	A.S.	0.250
54	2C + 12	A.S.	A.S.	0.250
56	2C + 12	A.S.	A.S.	0.250
58	2C + 12	A.S.	A.S.	0.250
60	2C + 12	A.S.	A.S.	0.250
72	2C + 12	A.S.	A.S.	0.250

NOTE 1) A.S. MEANS ANY SIZE LESS THAN A
2) C IS GREATER THAN, LESS THAN, OR EQUAL TO D

30 DEGREE REDUCING WYE

A DIAMETER	L LENGTH	C DIAMETER	D DIAMETER	DUCT THICKNESS
4		A.S.	A.S.	0.125
6		A.S.	A.S.	0.125
8		A.S.	A.S.	0.125
10		A.S.	A.S.	0.125
12		A.S.	A.S.	0.125
14		A.S.	A.S.	0.125
16		A.S.	A.S.	0.125
18		A.S.	A.S.	0.125
20		A.S.	A.S.	0.125
22		A.S.	A.S.	0.125
24		A.S.	A.S.	0.187
26		A.S.	A.S.	0.187
28		A.S.	A.S.	0.187
30		A.S.	A.S.	0.187
32		A.S.	A.S.	0.187
34		A.S.	A.S.	0.187
36		A.S.	A.S.	0.187
38		A.S.	A.S.	0.187
40		A.S.	A.S.	0.187
42		A.S.	A.S.	0.250
44		A.S.	A.S.	0.250
46		A.S.	A.S.	0.250
48		A.S.	A.S.	0.250
50		A.S.	A.S.	0.250
52		A.S.	A.S.	0.250
54		A.S.	A.S.	0.250
56		A.S.	A.S.	0.250
58		A.S.	A.S.	0.250
60		A.S.	A.S.	0.250
72		A.S.	A.S.	0.250

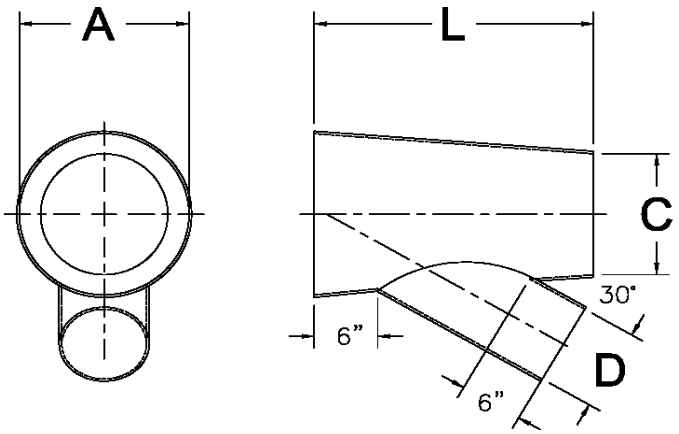

NOTE 1) A.S. MEANS ANY SIZE LESS THAN A
2) L EQUALS [5(A-C)] OR (2D + 12") WHICHEVER IS LONGER

30 DEGREE DOUBLE REDUCING WYE

A DIAMETER	L LENGTH	C DIAMETER	D DIAMETER	E DIAMETER	DUCT THICKNESS
4		A.S.	A.S.	A.S.	0.125
6		A.S.	A.S.	A.S.	0.125
8		A.S.	A.S.	A.S.	0.125
10		A.S.	A.S.	A.S.	0.125
12		A.S.	A.S.	A.S.	0.125
14		A.S.	A.S.	A.S.	0.125
16		A.S.	A.S.	A.S.	0.125
18		A.S.	A.S.	A.S.	0.125
20		A.S.	A.S.	A.S.	0.125
22		A.S.	A.S.	A.S.	0.125
24		A.S.	A.S.	A.S.	0.187
26		A.S.	A.S.	A.S.	0.187
28		A.S.	A.S.	A.S.	0.187
30		A.S.	A.S.	A.S.	0.187
32		A.S.	A.S.	A.S.	0.187
34		A.S.	A.S.	A.S.	0.187
36		A.S.	A.S.	A.S.	0.187
38		A.S.	A.S.	A.S.	0.187
40		A.S.	A.S.	A.S.	0.187
42		A.S.	A.S.	A.S.	0.250
44		A.S.	A.S.	A.S.	0.250
46		A.S.	A.S.	A.S.	0.250
48		A.S.	A.S.	A.S.	0.250
50		A.S.	A.S.	A.S.	0.250
52		A.S.	A.S.	A.S.	0.250
54		A.S.	A.S.	A.S.	0.250
56		A.S.	A.S.	A.S.	0.250
58		A.S.	A.S.	A.S.	0.250
60		A.S.	A.S.	A.S.	0.250
72		A.S.	A.S.	A.S.	0.250

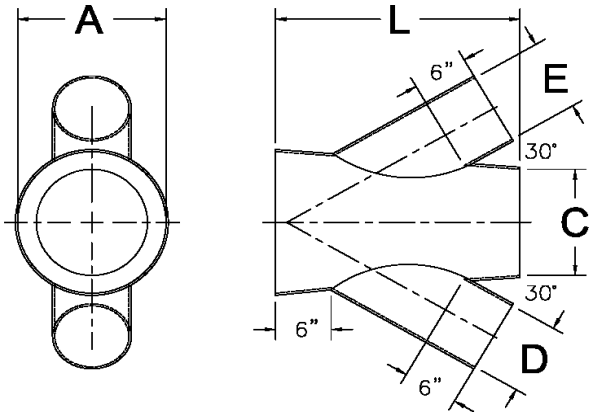

NOTE 1) A.S. MEANS ANY SIZE LESS THAN A
2) D IS GREATER THAN, LESS THAN, OR EQUAL TO E
3) L EQUALS [5(A-C)] OR (2D + 12") WHICHEVER IS LONGER

90 DEGREE REDUCING WYE

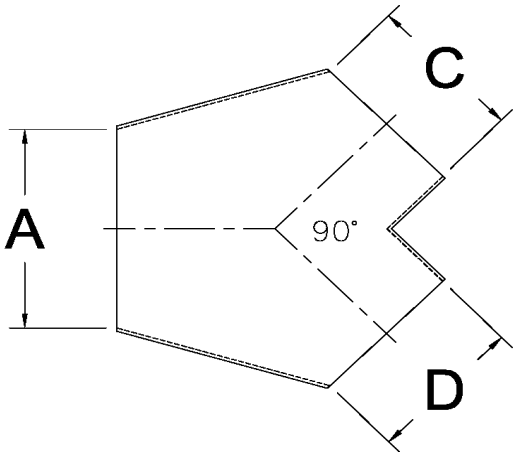

A DIAMETER	C DIAMETER	D DIAMETER	DUCT THICKNESS
4	A.S.	A.S.	0.125
6	A.S.	A.S.	0.125
8	A.S.	A.S.	0.125
10	A.S.	A.S.	0.125
12	A.S.	A.S.	0.125
14	A.S.	A.S.	0.125
16	A.S.	A.S.	0.125
18	A.S.	A.S.	0.125
20	A.S.	A.S.	0.125
22	A.S.	A.S.	0.125
24	A.S.	A.S.	0.187
26	A.S.	A.S.	0.187
28	A.S.	A.S.	0.187
30	A.S.	A.S.	0.187
32	A.S.	A.S.	0.187
34	A.S.	A.S.	0.187
36	A.S.	A.S.	0.187
38	A.S.	A.S.	0.187
40	A.S.	A.S.	0.187
42	A.S.	A.S.	0.250
44	A.S.	A.S.	0.250
46	A.S.	A.S.	0.250
48	A.S.	A.S.	0.250
50	A.S.	A.S.	0.250
52	A.S.	A.S.	0.250
54	A.S.	A.S.	0.250
56	A.S.	A.S.	0.250
58	A.S.	A.S.	0.250
60	A.S.	A.S.	0.250
72	A.S.	A.S.	0.250

NOTE A.S. MEANS ANY SIZE LESS THAN A

90 DEGREE WYE

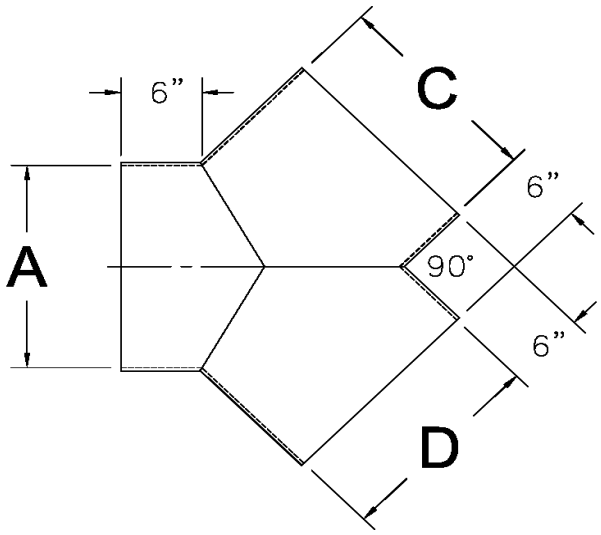

A DIAMETER	C DIAMETER	D DIAMETER	DUCT THICKNESS
4	4	4	0.125
6	6	6	0.125
8	8	8	0.125
10	10	10	0.125
12	12	12	0.125
14	14	14	0.125
16	16	16	0.125
18	18	18	0.125
20	20	20	0.125
22	22	22	0.125
24	24	24	0.187
26	26	26	0.187
28	28	28	0.187
30	30	30	0.187
32	32	32	0.187
34	34	34	0.187
36	36	36	0.187
38	38	38	0.187
40	40	40	0.187
42	42	42	0.250
44	44	44	0.250
46	46	46	0.250
48	48	48	0.250
50	50	50	0.250
52	52	52	0.250
54	54	54	0.250
56	56	56	0.250
58	58	58	0.250
60	60	60	0.250
72	72	72	0.250

OFFSET

A DIAMETER	L LENGTH	C OFFSET	DUCT THICKNESS
4	A.S.	A.S.	0.125
6	A.S.	A.S.	0.125
8	A.S.	A.S.	0.125
10	A.S.	A.S.	0.125
12	A.S.	A.S.	0.125
14	A.S.	A.S.	0.125
16	A.S.	A.S.	0.125
18	A.S.	A.S.	0.125
20	A.S.	A.S.	0.125
22	A.S.	A.S.	0.125
24	A.S.	A.S.	0.187
26	A.S.	A.S.	0.187
28	A.S.	A.S.	0.187
30	A.S.	A.S.	0.187
32	A.S.	A.S.	0.187
34	A.S.	A.S.	0.187
36	A.S.	A.S.	0.187
38	A.S.	A.S.	0.187
40	A.S.	A.S.	0.187
42	A.S.	A.S.	0.250
44	A.S.	A.S.	0.250
46	A.S.	A.S.	0.250
48	A.S.	A.S.	0.250
50	A.S.	A.S.	0.250
52	A.S.	A.S.	0.250
54	A.S.	A.S.	0.250
56	A.S.	A.S.	0.250
58	A.S.	A.S.	0.250
60	A.S.	A.S.	0.250
72	A.S.	A.S.	0.250

NOTE A.S. MEANS ANY SIZE

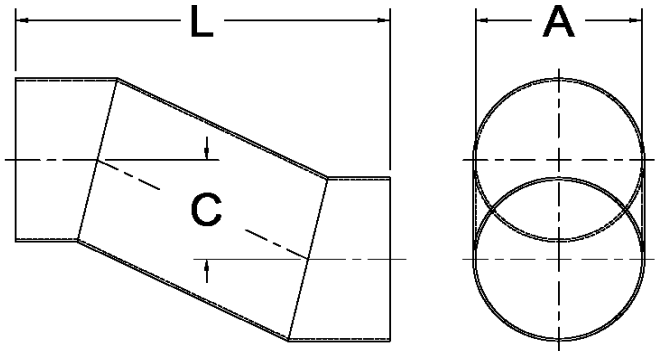

SQUARE TO ROUND TRANSITION

A DIAMETER	L LENGTH	C LENGTH	D LENGTH	DUCT THICKNESS
4	12	A.S.	A.S.	0.125
6	12	A.S.	A.S.	0.125
8	12	A.S.	A.S.	0.125
10	12	A.S.	A.S.	0.125
12	12	A.S.	A.S.	0.125
14	24	A.S.	A.S.	0.125
16	24	A.S.	A.S.	0.125
18	24	A.S.	A.S.	0.125
20	24	A.S.	A.S.	0.125
22	24	A.S.	A.S.	0.125
24	24	A.S.	A.S.	0.187
26	36	A.S.	A.S.	0.187
28	36	A.S.	A.S.	0.187
30	36	A.S.	A.S.	0.187
32	36	A.S.	A.S.	0.187
34	36	A.S.	A.S.	0.187
36	36	A.S.	A.S.	0.187
38	48	A.S.	A.S.	0.187
40	48	A.S.	A.S.	0.187
42	48	A.S.	A.S.	0.250
44	48	A.S.	A.S.	0.250
46	48	A.S.	A.S.	0.250
48	48	A.S.	A.S.	0.250
50	60	A.S.	A.S.	0.250
52	60	A.S.	A.S.	0.250
54	60	A.S.	A.S.	0.250
56	60	A.S.	A.S.	0.250
58	60	A.S.	A.S.	0.250
60	60	A.S.	A.S.	0.250
72	60	A.S.	A.S.	0.250

NOTE A.S. MEANS ANY SIZE

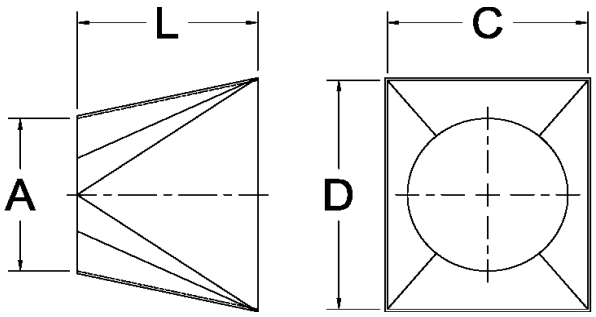

CONCENTRIC REDUCER

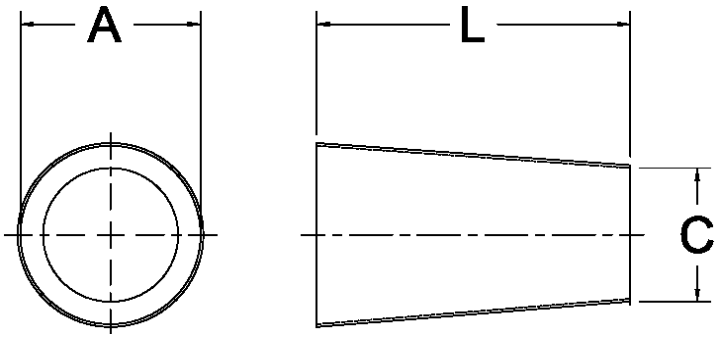

A DIAMETER	L LENGTH	C DIAMETER	DUCT THICKNESS
4	(A-C)5	A.S.	0.125
6	(A-C)5	A.S.	0.125
8	(A-C)5	A.S.	0.125
10	(A-C)5	A.S.	0.125
12	(A-C)5	A.S.	0.125
14	(A-C)5	A.S.	0.125
16	(A-C)5	A.S.	0.125
18	(A-C)5	A.S.	0.125
20	(A-C)5	A.S.	0.125
22	(A-C)5	A.S.	0.125
24	(A-C)5	A.S.	0.187
26	(A-C)5	A.S.	0.187
28	(A-C)5	A.S.	0.187
30	(A-C)5	A.S.	0.187
32	(A-C)5	A.S.	0.187
34	(A-C)5	A.S.	0.187
36	(A-C)5	A.S.	0.187
38	(A-C)5	A.S.	0.187
40	(A-C)5	A.S.	0.187
42	(A-C)5	A.S.	0.250
44	(A-C)5	A.S.	0.250
46	(A-C)5	A.S.	0.250
48	(A-C)5	A.S.	0.250
50	(A-C)5	A.S.	0.250
52	(A-C)5	A.S.	0.250
54	(A-C)5	A.S.	0.250
56	(A-C)5	A.S.	0.250
58	(A-C)5	A.S.	0.250
60	(A-C)5	A.S.	0.250
72	(A-C)5	A.S.	0.250

NOTE A.S. MEANS ANY SIZE LESS THAN A

ECCENTRIC REDUCER

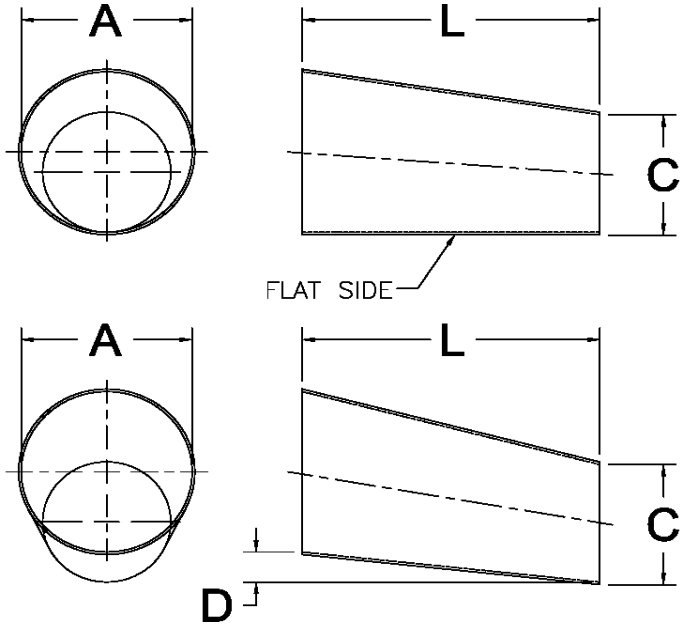

A DIAMETER	L LENGTH	C DIAMETER	D LENGTH	DUCT THICKNESS
4	(A-C)5	A.S.	A.S.	0.125
6	(A-C)5	A.S.	A.S.	0.125
8	(A-C)5	A.S.	A.S.	0.125
10	(A-C)5	A.S.	A.S.	0.125
12	(A-C)5	A.S.	A.S.	0.125
14	(A-C)5	A.S.	A.S.	0.125
16	(A-C)5	A.S.	A.S.	0.125
18	(A-C)5	A.S.	A.S.	0.125
20	(A-C)5	A.S.	A.S.	0.125
22	(A-C)5	A.S.	A.S.	0.125
24	(A-C)5	A.S.	A.S.	0.187
26	(A-C)5	A.S.	A.S.	0.187
28	(A-C)5	A.S.	A.S.	0.187
30	(A-C)5	A.S.	A.S.	0.187
32	(A-C)5	A.S.	A.S.	0.187
34	(A-C)5	A.S.	A.S.	0.187
36	(A-C)5	A.S.	A.S.	0.187
38	(A-C)5	A.S.	A.S.	0.187
40	(A-C)5	A.S.	A.S.	0.187
42	(A-C)5	A.S.	A.S.	0.250
44	(A-C)5	A.S.	A.S.	0.250
46	(A-C)5	A.S.	A.S.	0.250
48	(A-C)5	A.S.	A.S.	0.250
50	(A-C)5	A.S.	A.S.	0.250
52	(A-C)5	A.S.	A.S.	0.250
54	(A-C)5	A.S.	A.S.	0.250
56	(A-C)5	A.S.	A.S.	0.250
58	(A-C)5	A.S.	A.S.	0.250
60	(A-C)5	A.S.	A.S.	0.250
72	(A-C)5	A.S.	A.S.	0.250

NOTE A.S. MEANS ANY SIZE LESS THAN A

6" STUB FLANGE

A DIAMETER	B FLANGE O.D.	FLANGE THICKNESS	DUCT THICKNESS
4	7.312	0.187	0.125
6	9.312	0.187	0.125
8	11.312	0.187	0.125
10	13.312	0.187	0.125
12	15.312	0.187	0.125
14	17.312	0.187	0.125
16	19.312	0.187	0.125
18	21.312	0.187	0.125
20	23.312	0.187	0.125
22	25.312	0.187	0.125
24	28.437	0.250	0.187
26	30.437	0.250	0.187
28	32.437	0.250	0.187
30	34.437	0.250	0.187
32	36.437	0.250	0.187
34	38.437	0.250	0.187
36	40.437	0.250	0.187
38	42.437	0.250	0.187
40	44.437	0.250	0.187
42	46.562	0.250	0.250
44	48.562	0.250	0.250
46	50.562	0.250	0.250
48	52.562	0.250	0.250
50	54.562	0.250	0.250
52	56.562	0.250	0.250
54	58.562	0.250	0.250
56	60.562	0.250	0.250
58	62.562	0.250	0.250
60	64.562	0.250	0.250
72	76.562	0.250	0.250

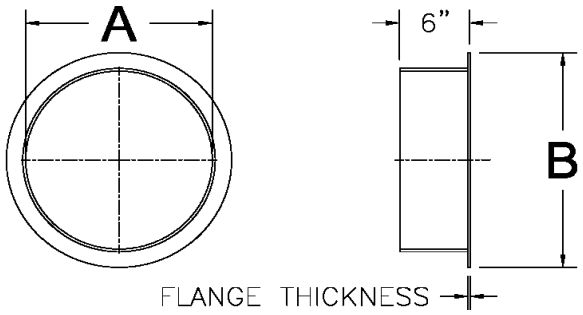

NOTE STANDARD FLANGES ARE SHIPPED UNDRILLED

6" STUB WITH BLIND FLANGE

A DIAMETER	B FLANGE O.D.	FLANGE THICKNESS	DUCT THICKNESS
4	7.312	0.187	0.125
6	9.312	0.187	0.125
8	11.312	0.187	0.125
10	13.312	0.187	0.125
12	15.312	0.187	0.125
14	17.312	0.187	0.125
16	19.312	0.187	0.125
18	21.312	0.187	0.125
20	23.312	0.187	0.125
22	25.312	0.187	0.125
24	28.437	0.250	0.187
26	30.437	0.250	0.187
28	32.437	0.250	0.187
30	34.437	0.250	0.187
32	36.437	0.250	0.187
34	38.437	0.250	0.187
36	40.437	0.250	0.187
38	42.437	0.250	0.187
40	44.437	0.250	0.187
42	46.562	0.250	0.250
44	48.562	0.250	0.250
46	50.562	0.250	0.250
48	52.562	0.250	0.250
50	54.562	0.250	0.250
52	56.562	0.250	0.250
54	58.562	0.250	0.250
56	60.562	0.250	0.250
58	62.562	0.250	0.250
60	64.562	0.250	0.250
72	76.562	0.250	0.250

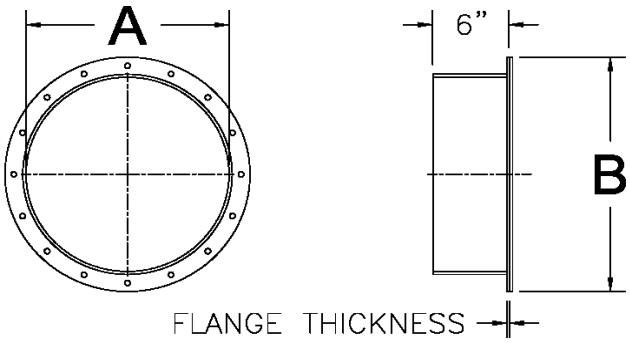

NOTE 1) STANDARD BLIND FLANGES USE DRILL PATTERNS FROM SMACNA (PAGE 34)
2) STANDARD GASKET MATERIAL IS EITHER NEOPRENE OR CLOSED CELL PVC FOAM

VOLUME DAMPER WITH PLAIN END

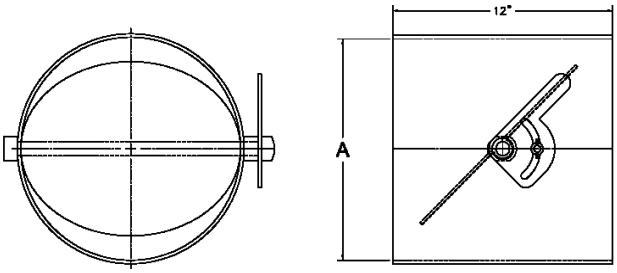

A DIAMETER	DUCT THICKNESS
4	0.125
6	0.125
8	0.125
10	0.125
12	0.125
14	0.125
16	0.125
18	0.125
20	0.125
22	0.125
24	0.187
26	0.187
28	0.187
30	0.187
32	0.187
34	0.187
36	0.187
38	0.187
40	0.187
42	0.250
44	0.250
46	0.250
48	0.250
50	0.250
52	0.250
54	0.250
56	0.250
58	0.250
60	0.250
72	0.250

VOLUME DAMPER WITH FLANGES

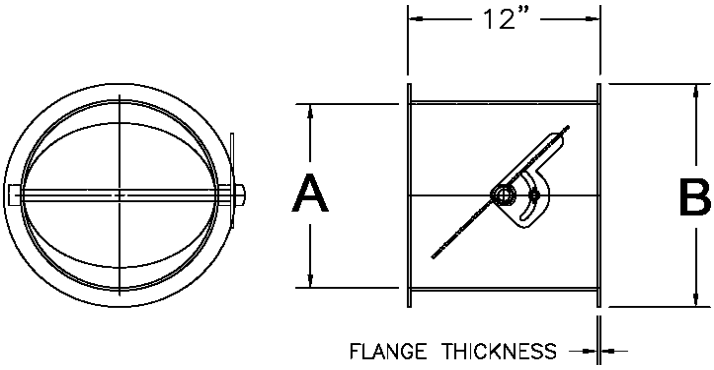

A DIAMETER	B FLANGE OD	FLANGE THICKNESS	DUCT THICKNESS
4	7.312	0.187	0.125
6	9.312	0.187	0.125
8	11.312	0.187	0.125
10	13.312	0.187	0.125
12	15.312	0.187	0.125
14	17.312	0.187	0.125
16	19.312	0.187	0.125
18	21.312	0.187	0.125
20	23.312	0.187	0.125
22	25.312	0.187	0.125
24	28.437	0.250	0.187
26	30.437	0.250	0.187
28	32.437	0.250	0.187
30	34.437	0.250	0.187
32	36.437	0.250	0.187
34	38.437	0.250	0.187
36	40.437	0.250	0.187
38	42.437	0.250	0.187
40	44.437	0.250	0.187
42	46.562	0.250	0.250
44	48.562	0.250	0.250
46	50.562	0.250	0.250
48	52.562	0.250	0.250
50	54.562	0.250	0.250
52	56.562	0.250	0.250
54	58.562	0.250	0.250
56	60.562	0.250	0.250
58	62.562	0.250	0.250
60	64.562	0.250	0.250
72	76.562	0.250	0.250

NOTE STANDARD VOLUME DAMPER FLANGES ARE SHIPPED UNDRILLED

BLASTGATE WITH PLAIN END

A DIAMETER	DUCT THICKNESS
4	0.125
6	0.125
8	0.125
10	0.125
12	0.125
14	0.125
16	0.125
18	0.125
20	0.125
22	0.125
24	0.187
26	0.187
28	0.187
30	0.187
32	0.187
34	0.187
36	0.187
38	0.187
40	0.187
42	0.250
44	0.250
46	0.250
48	0.250
50	0.250
52	0.250
54	0.250
56	0.250
58	0.250
60	0.250
72	0.250

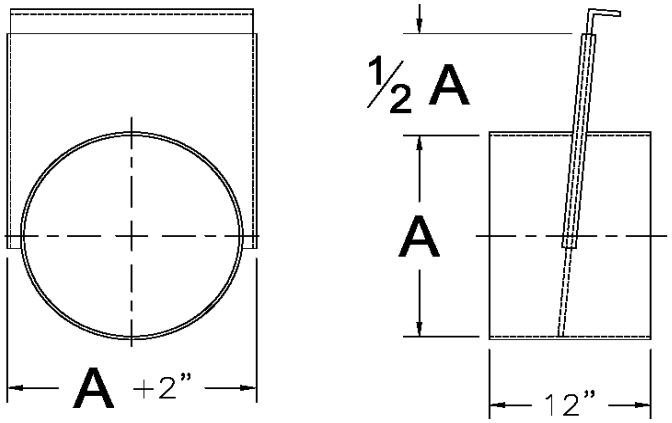

BLASTGATE WITH FLANGES

A DIAMETER	B FLANGE O.D.	FLANGE THICKNESS	DUCT THICKNESS
4	7.312	0.187	0.125
6	9.312	0.187	0.125
8	11.312	0.187	0.125
10	13.312	0.187	0.125
12	15.312	0.187	0.125
14	17.312	0.187	0.125
16	19.312	0.187	0.125
18	21.312	0.187	0.125
20	23.312	0.187	0.125
22	25.312	0.187	0.125
24	28.437	0.250	0.187
26	30.437	0.250	0.187
28	32.437	0.250	0.187
30	34.437	0.250	0.187
32	36.437	0.250	0.187
34	38.437	0.250	0.187
36	40.437	0.250	0.187
38	42.437	0.250	0.187
40	44.437	0.250	0.187
42	46.562	0.250	0.250
44	48.562	0.250	0.250
46	50.562	0.250	0.250
48	52.562	0.250	0.250
50	54.562	0.250	0.250
52	56.562	0.250	0.250
54	58.562	0.250	0.250
56	60.562	0.250	0.250
58	62.562	0.250	0.250
60	64.562	0.250	0.250
72	76.562	0.250	0.250

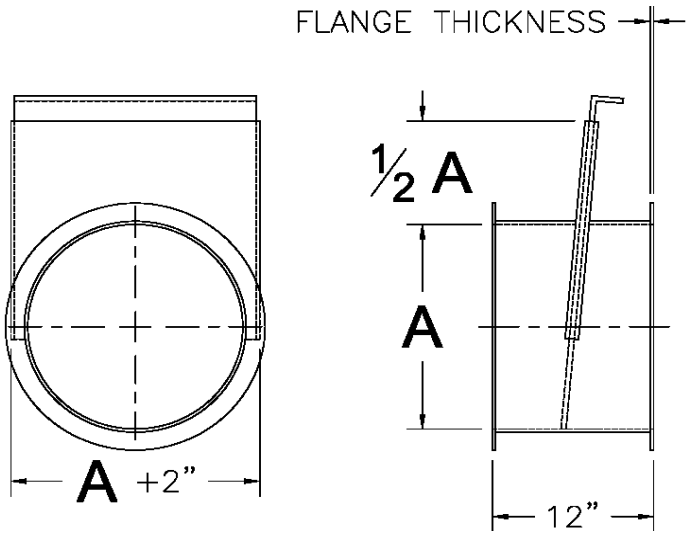

NOTE STANDARD BLASTGATE FLANGES ARE SHIPPED UNDRILLED

NO-LOSS STACK CAP

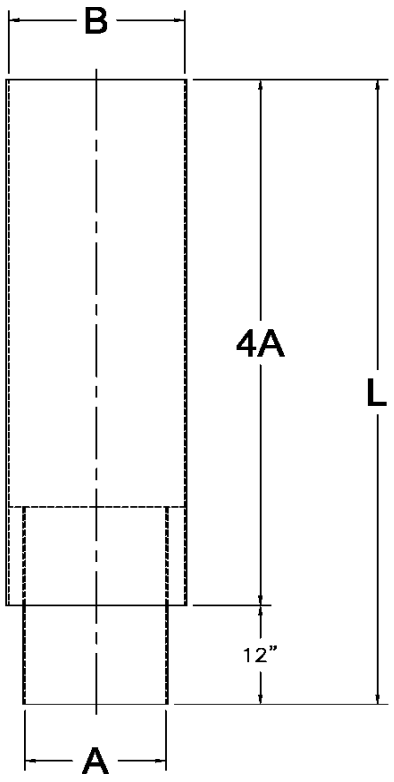

A DIAMETER	B DIAMETER	L LENGTH	DUCT THICKNESS
4	8	28	0.125
6	10	36	0.125
8	12	44	0.125
10	14	52	0.125
12	16	60	0.125
14	18	68	0.125
16	20	76	0.125
18	22	84	0.125
20	24	92	0.125
22	26	100	0.125
24	28	108	0.187
26	30	116	0.187
28	32	124	0.187
30	34	132	0.187
32	36	140	0.187
34	38	148	0.187
36	40	156	0.187
38	42	164	0.187
40	44	172	0.187
42	46	180	0.250
44	48	188	0.250
46	50	196	0.250
48	54	204	0.250
50	56	212	0.250
52	58	220	0.250
54	60	228	0.250
56	62	236	0.250
58	64	244	0.250
60	66	252	0.250
72	78	300	0.250

NOTE: FOR OTHER THAN STANDARD DESIGNS, CUSTOMER MUST PROVIDE WIND LOADS FOR VIRON TO DESIGN STACK

RAIN CAP

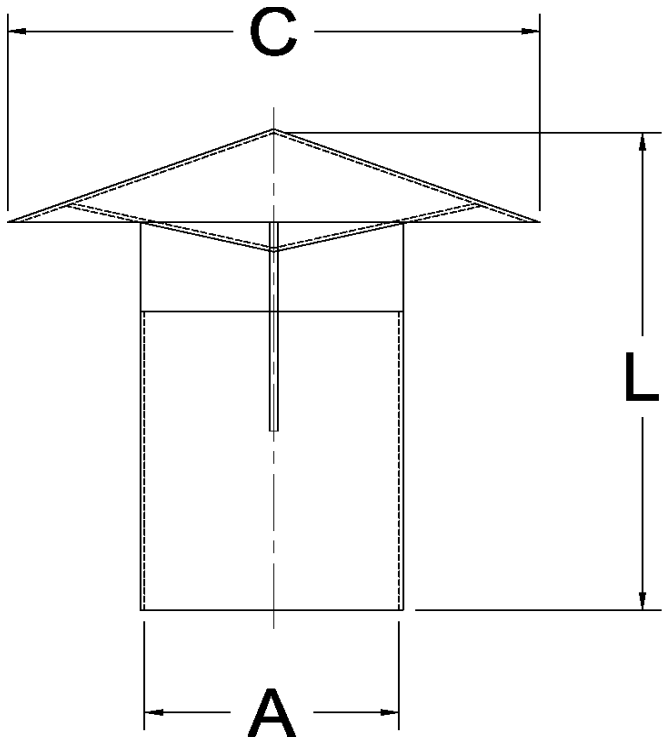

A DIAMETER	L LENGTH	C DIAMETER	DUCT THICKNESS
4	8	8	0.125
6	12	12	0.125
8	16	16	0.125
10	20	20	0.125
12	24	24	0.125
14	28	28	0.125
16	32	32	0.125
18	36	36	0.125
20	40	40	0.125
22	44	44	0.125
24	48	48	0.187
26	52	52	0.187
28	56	56	0.187
30	60	60	0.187
32	64	64	0.187
34	68	68	0.187
36	72	72	0.187
38	76	76	0.187
40	80	80	0.187
42	84	84	0.250
44	88	88	0.250
46	92	92	0.250
48	96	96	0.250
50	100	100	0.250
52	104	104	0.250
54	108	108	0.250
56	112	112	0.250
58	116	116	0.250
60	120	120	0.250
72	144	144	0.250

BUTTERFLY STACK CAP

A DIAMETER	B DIAMETER	C DIAMETER	L LENGTH	E FLANGE THICKNESS	DUCT THICKNESS
4	8	11.312	12	0.187	0.125
6	10	13.312	13	0.187	0.125
8	12	15.312	14	0.187	0.125
10	14	17.312	15	0.187	0.125
12	16	19.312	16	0.187	0.125
14	18	21.312	17	0.187	0.125
16	20	23.312	18	0.187	0.125
18	22	25.312	19	0.187	0.125
20	24	28.437	20	0.187	0.125
22	26	30.437	21	0.187	0.125
24	28	32.437	22	0.187	0.187
26	30	34.437	23	0.250	0.187
28	32	36.437	24	0.250	0.187
30	34	38.437	25	0.250	0.187
32	36	40.437	26	0.250	0.187
34	38	42.437	27	0.250	0.187
36	40	44.437	28	0.250	0.187
38	42	46.562	29	0.250	0.187
40	44	48.562	30	0.250	0.187
42	46	50.562	31	0.250	0.250
44	48	62.562	32	0.250	0.250
46	50	54.562	33	0.250	0.250
48	54	58.562	34	0.250	0.250
50	56	60.562	35	0.250	0.250
52	58	62.562	36	0.250	0.250
54	60	64.562	37	0.250	0.250
56	62	66.562	38	0.250	0.250
58	64	68.562	39	0.250	0.250
60	66	70.562	40	0.250	0.250
72	78	82.562	46	0.250	0.250

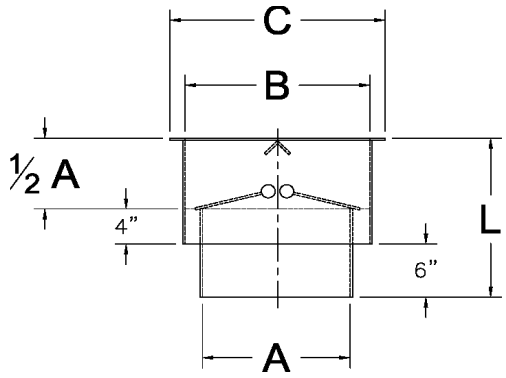

OFFSET STACK

A DIAMETER	L HEIGHT	STACK THICKNESS
4	A.S.	C.F.
6	A.S.	C.F.
8	A.S.	C.F.
10	A.S.	C.F.
12	A.S.	C.F.
14	A.S.	C.F.
16	A.S.	C.F.
18	A.S.	C.F.
20	A.S.	C.F.
22	A.S.	C.F.
24	A.S.	C.F.
26	A.S.	C.F.
28	A.S.	C.F.
30	A.S.	C.F.
32	A.S.	C.F.
34	A.S.	C.F.
36	A.S.	C.F.
38	A.S.	C.F.
40	A.S.	C.F.
42	A.S.	C.F.
44	A.S.	C.F.
46	A.S.	C.F.
48	A.S.	C.F.
50	A.S.	C.F.
52	A.S.	C.F.
54	A.S.	C.F.
56	A.S.	C.F.
58	A.S.	C.F.
60	A.S.	C.F.
72	A.S.	C.F.

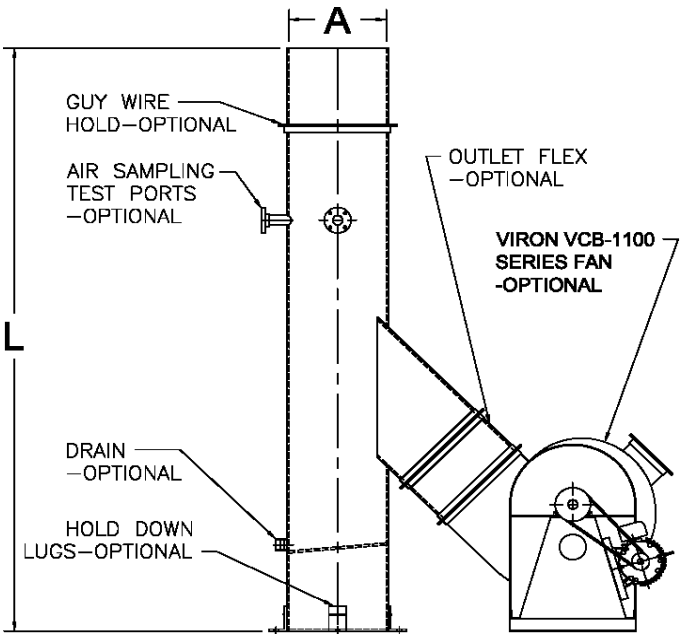

NOTE 1) A.S. MEANS ANY SIZE
2) C.F. MEANS CONSULT FACTORY
3) ALL OFFSET STACKS ARE DESIGNED WITH GUY WIRES. FREE STANDING STACKS ARE AVAILBLE, CONSULT THE FACTORY

SADDLE TAP

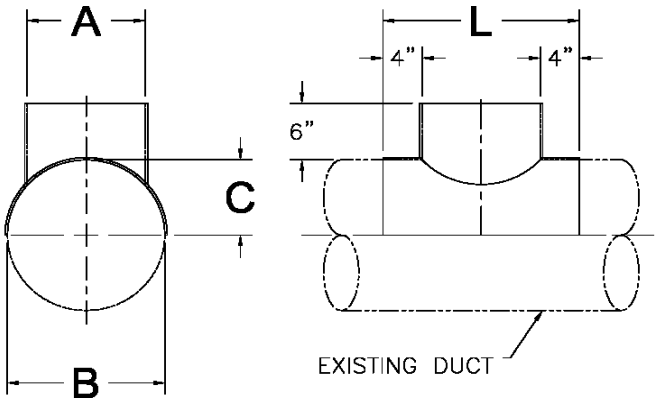

A DIAMETER	B DIAMETER	C HEIGHT	L LENGTH	DUCT THICKNESS
4	A.S.	1/2 B	A + 8	0.125
6	A.S.	1/2 B	A + 8	0.125
8	A.S.	1/2 B	A + 8	0.125
10	A.S.	1/2 B	A + 8	0.125
12	A.S.	1/2 B	A + 8	0.125
14	A.S.	1/2 B	A + 8	0.125
16	A.S.	1/2 B	A + 8	0.125
18	A.S.	1/2 B	A + 8	0.125
20	A.S.	1/2 B	A + 8	0.125
22	A.S.	1/2 B	A + 8	0.125
24	A.S.	1/2 B	A + 8	0.187
26	A.S.	1/2 B	A + 8	0.187
28	A.S.	1/2 B	A + 8	0.187
30	A.S.	1/2 B	A + 8	0.187
32	A.S.	1/2 B	A + 8	0.187
34	A.S.	1/2 B	A + 8	0.187
36	A.S.	1/2 B	A + 8	0.187
38	A.S.	1/2 B	A + 8	0.187
40	A.S.	1/2 B	A + 8	0.187
42	A.S.	1/2 B	A + 8	0.250
44	A.S.	1/2 B	A + 8	0.250
46	A.S.	1/2 B	A + 8	0.250
48	A.S.	1/2 B	A + 8	0.250
50	A.S.	1/2 B	A + 8	0.250
52	A.S.	1/2 B	A + 8	0.250
54	A.S.	1/2 B	A + 8	0.250
56	A.S.	1/2 B	A + 8	0.250
58	A.S.	1/2 B	A + 8	0.250
60	A.S.	1/2 B	A + 8	0.250
72	A.S.	1/2 B	A + 8	0.250

NOTE: A.S. MEANS ANY SIZE GREATER THAN A

BOOT

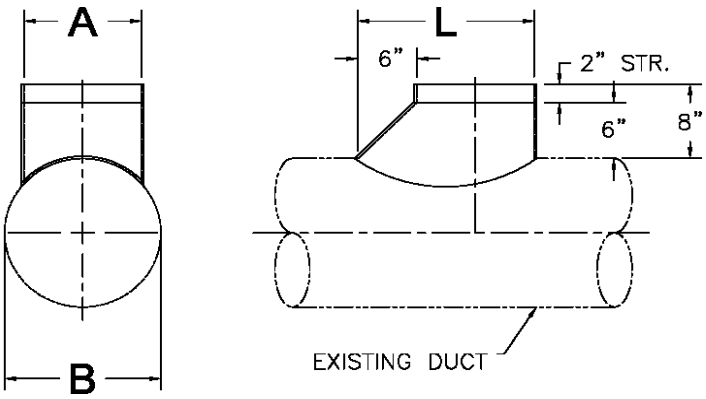

A DIAMETER	B DIAMETER	L LENGTH	DUCT THICKNESS
4	A.S.	A + 6	0.125
6	A.S.	A + 6	0.125
8	A.S.	A + 6	0.125
10	A.S.	A + 6	0.125
12	A.S.	A + 6	0.125
14	A.S.	A + 6	0.125
16	A.S.	A + 6	0.125
18	A.S.	A + 6	0.125
20	A.S.	A + 6	0.125
22	A.S.	A + 6	0.125
24	A.S.	A + 6	0.187
26	A.S.	A + 6	0.187
28	A.S.	A + 6	0.187
30	A.S.	A + 6	0.187
32	A.S.	A + 6	0.187
34	A.S.	A + 6	0.187
36	A.S.	A + 6	0.187
38	A.S.	A + 6	0.187
40	A.S.	A + 6	0.187
42	A.S.	A + 6	0.250
44	A.S.	A + 6	0.250
46	A.S.	A + 6	0.250
48	A.S.	A + 6	0.250
50	A.S.	A + 6	0.250
52	A.S.	A + 6	0.250
54	A.S.	A + 6	0.250
56	A.S.	A + 6	0.250
58	A.S.	A + 6	0.250
60	A.S.	A + 6	0.250
72	A.S.	A + 6	0.250

NOTE: A.S. MEANS ANY SIZE GREATER THAN A

A DIAMETER	B FLANGE O.D	FLANGE THICKNESS
4	7.312	0.187
6	9.312	0.187
8	11.312	0.187
10	13.312	0.187
12	15.312	0.187
14	17.312	0.187
16	19.312	0.187
18	21.312	0.187
20	23.312	0.187
22	25.312	0.187
24	28.437	0.250
26	30.437	0.250
28	32.437	0.250
30	34.437	0.250
32	36.437	0.250
34	38.437	0.250
36	40.437	0.250
38	42.437	0.250
40	44.437	0.250
42	46.562	0.250
44	48.562	0.250
46	50.562	0.250
48	52.562	0.250
50	54.562	0.250
52	56.562	0.250
54	58.562	0.250
56	60.562	0.250
58	62.562	0.250
60	64.562	0.250
72	76.562	0.250

FLANGED CONNECTOR WITH PVC FLEX

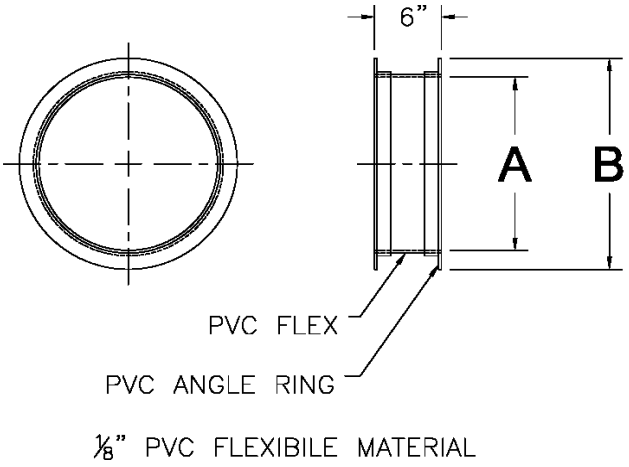

NOTE: 1) PVC FLEX MATERIAL IS .125" THICK
2) STANDARD FLANGES ARE SHIPPED UNDRILLED

A DIAMETER
4
6
8
10
12
14
16
18
20
22
24
26
28
30
32
34
36
38
40
42
44
46
48
50
52
54
56
58
60
72

FIRE SPRINKLER ACCESS DOOR

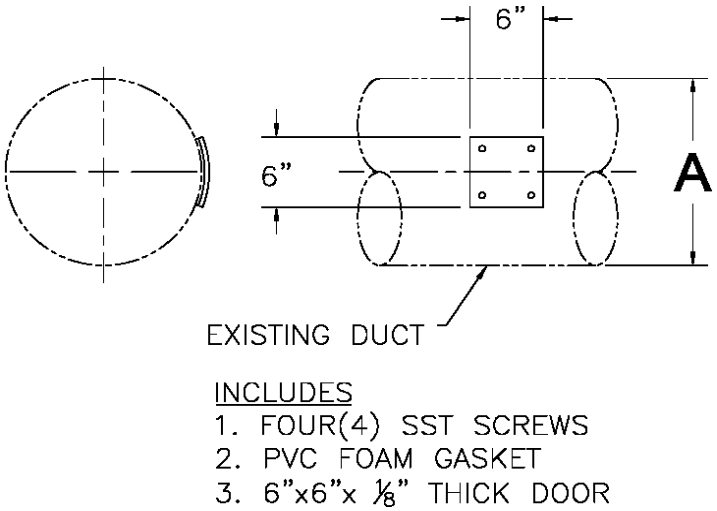

NOTE 1) A.S. MEANS ANY SIZE
2) C.F. MEANS CONSULT FACTORY
3) ALL OFFSET STACKS ARE DESIGNED WITH GUY WIRES. FREE STANDING STACKS ARE AVAILBLE, CONSULT THE FACTORY

END CAP

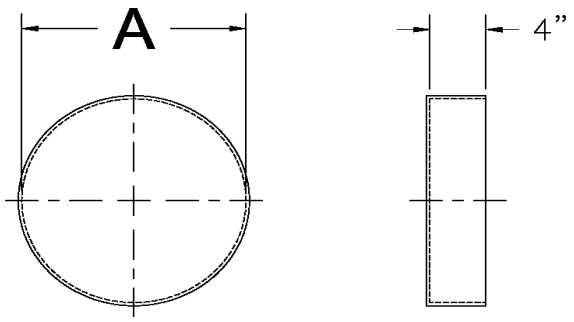

A DIAMETER	DUCT THICKNESS
4.312	0.125
6.312	0.125
8.312	0.125
10.312	0.125
12.312	0.125
14.312	0.125
16.312	0.125
18.312	0.125
20.312	0.125
22.312	0.125
24.437	0.187
26.437	0.187
28.437	0.187
30.437	0.187
32.437	0.187
34.437	0.187
36.437	0.187
38.437	0.187
40.437	0.187
42.562	0.250
44.562	0.250
46.562	0.250
48.562	0.250
50.562	0.250
52.562	0.250
54.562	0.250
56.562	0.250
58.562	0.250
60.562	0.250
72.562	0.250

COUPLING

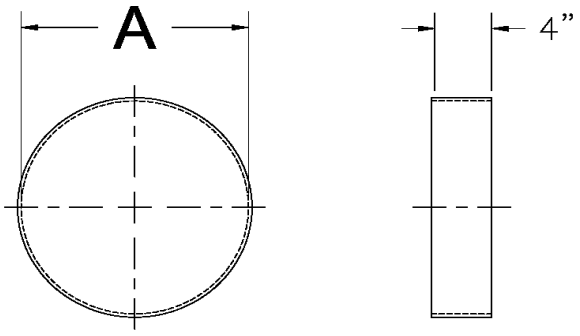

A DIAMETER	DUCT THICKNESS
4.312	0.125
6.312	0.125
8.312	0.125
10.312	0.125
12.312	0.125
14.312	0.125
16.312	0.125
18.312	0.125
20.312	0.125
22.312	0.125
24.437	0.187
26.437	0.187
28.437	0.187
30.437	0.187
32.437	0.187
34.437	0.187
36.437	0.187
38.437	0.187
40.437	0.187
42.562	0.250
44.562	0.250
46.562	0.250
48.562	0.250
50.562	0.250
52.562	0.250
54.562	0.250
56.562	0.250
58.562	0.250
60.562	0.250
72.562	0.250

A DIAMETER	C LENGTH	DUCT THICKNESS
4	15	0.125
6	17	0.125
8	19	0.125
10	21	0.125
12	23	0.125
14	25	0.125
16	27	0.125
18	29	0.125
20	31	0.125
22	33	0.125
24	35	0.187
26	37	0.187
28	39	0.187
30	41	0.187
32	43	0.187
34	45	0.187
36	47	0.187
38	49	0.187
40	51	0.187
42	53	0.250
44	56	0.250
46	57	0.250
48	59	0.250
50	61	0.250
52	63	0.250
54	65	0.250
56	67	0.250
58	69	0.250
60	71	0.250
72	83	0.250

CURB CAP WITH PLAIN END DUCT

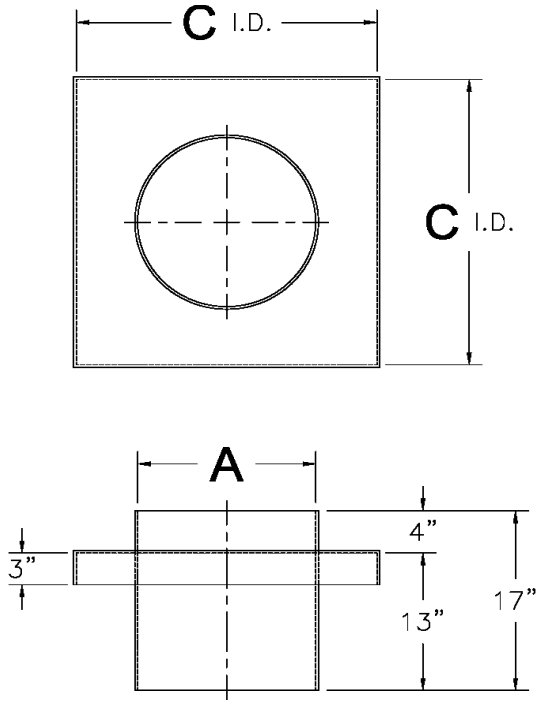

NOTE: VIRON CAN CUSTOM MANUFACTURE ANY CURB CAP TO FIT AN EXISTING ROOF CURB, CONSULT THE FACTORY

A DIAMETER	B DIAMETER	C LENGTH	D FLANGE THICKNESS	DUCT THICKNESS
4	7.312	15	0.187	0.125
6	9.312	17	0.187	0.125
8	11.312	19	0.187	0.125
10	13.312	21	0.187	0.125
12	15.312	23	0.187	0.125
14	17.312	25	0.187	0.125
16	19.312	27	0.187	0.125
18	21.312	29	0.187	0.125
20	23.312	31	0.187	0.125
22	25.312	33	0.187	0.125
24	28.437	35	0.250	0.187
26	30.437	37	0.250	0.187
28	32.437	39	0.250	0.187
30	34.437	41	0.250	0.187
32	36.437	43	0.250	0.187
34	38.437	45	0.250	0.187
36	40.437	47	0.250	0.187
38	42.437	49	0.250	0.187
40	44.437	51	0.250	0.187
42	46.562	53	0.250	0.250
44	48.562	55	0.250	0.250
46	50.562	57	0.250	0.250
48	52.562	59	0.250	0.250
50	54.562	61	0.250	0.250
52	56.562	63	0.250	0.250
54	58.562	65	0.250	0.250
56	60.562	67	0.250	0.250
58	62.562	69	0.250	0.250
60	64.562	71	0.250	0.250
72	76.562	83	0.250	0.250

CURB CAP WITH FLANGED DUCT

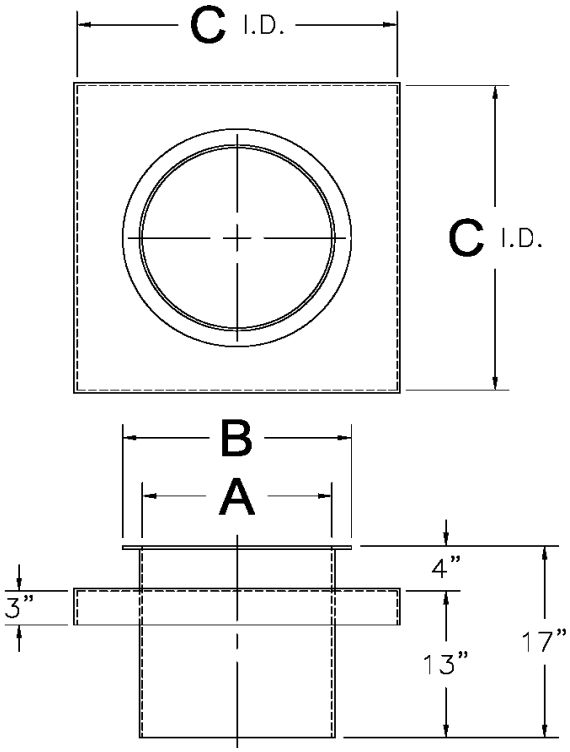

NOTE 1) VIRON CAN CUSTOM MANUFACTURE ANY CURB CAP TO FIT AN EXISTING ROOF CURB, CONSULT THE FACTORY
2) STANDARD FLANGES ARE SHIPPED UNDRILLED

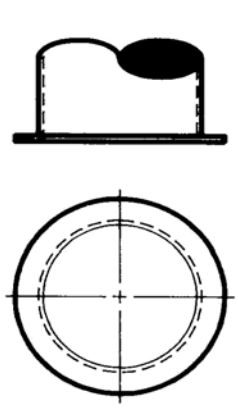

FLANGED END

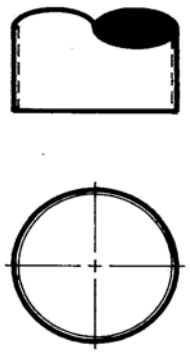

PLAIN END

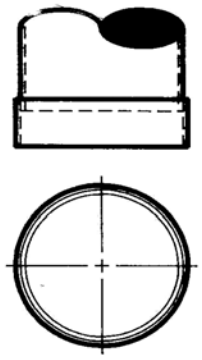

BELL & SPIGOT END

VIRON® manufactures all PVC duct and fittings with plain ends as shown in the middle illustration above. Both flanged and bell and spigot ends are available upon request. Please consult your local representative for further details.

—GENERAL NOTES—

As in all catalogs, we are making certain assumptions in order to come up with standard fittings. Listed below are some notes which may help clarify some common misconceptions:

1. **VIRON®** can manufacture rectangular duct, see pages 46 through 49. Consult your local representative for pricing and availability.

2. Standard elbows are manufactured with a centerline radius 1.5 times the diameter. However, **VIRON®** can manufacture any radius length to meet your requirements. Consult your local representative.

3. Reducers are manufactured with a standard length (large diameter - small diameter) times (5). Custom lengths are available from the factory. Consult your local representative.

4. All **VIRON®** VI-A-DUC® PVC duct is custom manufactured for each individual project. In order to maximize the corrosion resistance for these projects, we can help you specify the right material for your application. Contact our application engineers for valuable input to your corrosion problems.

5. All **VIRON®** VI-A-DUC® PVC duct is manufactured per SMACNA Standards. The pressure and vacuum ratings for this standard duct are shown on page 27. If your project requires an increase of either pressure or vacuum, **VIRON®** can design the duct and fittings to meet your requirements.

"VI-A-DUC®"

SPECIFICATION FOR RIGID POLYVINYL CHLORIDE (PVC) DUCTWORK WITH FM APPROVAL

1.0 SCOPE

This section specifies Polyvinyl Chloride (PVC) ductwork for conveying air, or a mixture of air and other gases and acids.

2.0 DESCRIPTION OF SYSTEMS

Ductwork shall be fabricated and installed under this section for the following systems:

2.1 All exhaust ventilation ductwork from the point of connection on the tank hoods to the entering side of scrubbers, air washers, or exhaust fans.

2.2 All discharge stacks from scrubbers, air washers, or exhaust fans.

2.3 Design Pressure: 6 inches W. C., negative, for exhuast ductwork
4 inches W. C., positive, for push air ductwork

3.0 QUALITY ASSURANCE

3.1 Material shall be specified as Trovidur Series 250, Type II, Grade I, PVC Class 14333-D, ASTM D-1784. Composition shall include inhibitor for UV radiation. A material sample coupon shall be submitted to the engineer for review with the bid package. **VIRON®** International PVC Duct meets or exceeds all of the above specifications.

3.2 Ductwork shall be fabricated, reinforced, installed, sealed and tested in accordance with requirements and recommendations of the SMACNA Thermoplastic Duct (PVC) Construction Manual.

3.3 The ductwork provided shall be manufactured by a firm with at least five (5) years of experience in similar type applications.

3.4 All the duct and duct components shall be manufactured by a certified fabricator and bear the "FM" label.

4.0 PRODUCT HANDLING

4.1 Storage - All ductwork material delivered to the job and not installed immediately is to be stored in a safe, dry location and protected against damage or loss.

5.0 DUCTWORK FABRICATION

5.1 Attachment of Reinforcement

5.1.1 Attachment of PVC reinforcement shall be by hot gas/filler rod welding. Solvent welding shall not be used. (See Figures 1, 2 and 3)

5.1.2 Where penetration of duct wall is approved, or specified, hardware shall be PVC encapsulated on inside of the duct, unless otherwise specified.

5.1.3 Where reinforcement is required on only two sides of duct, reinforcement shall terminate within a distance from edge of duct, equal to twice wall thickness.

5.1.4 Where reinforcement is required on all four sides of duct, it shall be full frame type with adjacent members lapped, and welded at corners. (See Figure 3)

5.2 Welding

5.2.1 Welding shall be done by hot gas fusion welding method utilizing PVC filler rod as manufactured for this purpose. Solvent welding shall not be used. (See Figure 5)

5.2.2 Welding shall be performed by workmen adequately trained in the art of PVC welding and certified in accordance with ASTM 1789 test methods.

5.2.3 Ductwork, hoods and similar air passage enclosures shall be finished completely air and water tight with smooth interior surfaces.

5.2.4 Ductwork shall be completely free from cracks, distortions or other imperfections.

5.2.5 The following table outlines minimum number of welding passes required:

TYPE OF WELDING			
	Wall Thickness (Inches)	**Rod Diameter (Inches)**	**Minimum # of Welding Passes**
Longitudinal Seams	1/8	5/32	4"-12" Diameter Hand Welded-One (1)
	1/8	—	14"-22" Diameter Butt Welded
	3/16	—	24"-40" Diameter Butt Welded
	1/4	—	42"-72" Diameter Butt Welded
Circumferential Seams	1/8	5/32	Three (3) Hand Welded
	3/16	5/32	Three (3) Hand Welded
	1/4	5/32	Three (3) Hand Welded
Note: Whenever possible, longitudinal and circumferential welds shall have one (1) interior weld sealing the seam in addition to outside welds, for maximum strength.			
Ducts - Flanges and Reinforcing	1/8	5/32	Three (3)
	3/16	5/32	Three (3)
	1/4	5/32	Three (3)
Note: Flanges to be back-welded a minimum of one (1) pass.			

5.3 Longitudinal Seams

5.3.1 For thermally formed round duct sections, longitudinal seams shall be butt welded. (See Figure 6)

5.3.2 Alignment of longitudinal seams in adjacent butt welded sections of duct shall be avoided, and seams shall be staggered. (See Figure 11)

5.3.3 For straight rectangular duct, the corners shall be formed. Welded corner seams are not acceptable. (See Figure 4)

5.3.4 Longitudinal seams shall be butt welded and located at a distance of not less than 1/8 of the span width from corner of duct.

5.4 Elbows - Round Duct

5.4.1 Unless otherwise specified, centerline radius for standard elbows shall be 1.5 times diameter.

5.4.2 Segmented elbows shall be joined by butt welding and number of gores or segments shall be in accordance with table included herein.

5.4.3 Elbows may also be constructed by press forming in halves from a sheet. The halves shall then be joined by hot gas fusion welding method.

SEGMENTED ELBOWS		
Duct Diameter or Width	**Minimum Number of Segments**	
	45 Degrees	*90 Degrees*
4 thru 8 inches	2	3
10 thru 48 inches	3	5
50 inches and above	4	7

5.5 Elbows - Rectangular Duct

5.5.1 Rectangular elbows shall be fabricated from flat stock with welded corner construction. (See Figure 4)

5.5.2 Unless otherwise specified, centerline radius for standard rectangular elbows shall be 1.5 times duct width.

5.5.3 Square throat elbows shall be provided with turning vanes.

5.6 Turning Vanes

5.6.1 Unless otherwise specified, turning vanes shall be constructed in accordance with the SMACNA Thermoplastic Duct (PVC) Construction Manual.

5.7 Offsets

5.7.1 Unless otherwise specified, centerline radii for standard offsets shall be the same as for elbows.

5.7.2 Where space limitations will not allow standard centerline radius offset, vane blades shall be installed to decrease turbulence.

5.8 Transitions and Reducers

5.8.1 Transition pieces in mains and sub-mains shall be tapered.

5.8.2 Unless otherwise specified, angular limitations for transitions illustrated in the thermoplastic duct construction manual shall be held where field conditions permit.

5.9 Branches Entering Main

5.9.1 Branch ducts shall enter main duct near large end of a transition, at an angle not exceeding 45 degrees wherever possible.

5.9.2 Branches shall not be positioned directly opposite one another on a main or a sub-main.

5.9.3 Intersection of branches with mains shall be continuously welded.

5.10 Transverse Joints

5.10.1 Transverse joints shall be made by either flanged method or bell and spigot method. Welded butt joints shall not be used.

5.10.2 Flanged Joints:

a. Minimum dimensions of flanges for round and rectangular duct shall be in accordance with the SMACNA Thermoplastic Duct Construction Manual. (See Table 1)

b. Where flange joints are used as reinforcement, their rigidity shall also be at least equivalent to that specified by the SMACNA Thermoplastic Duct Construction Manual. (See Figure 2)

c. Spacing between flanges and/or equivalent reinforcement shall be as specified in the SMACNA Thermoplastic Duct Construction Manual.

d. Flanges shall be welded to the end of duct on outside and inside of flange face, as shown in the SMACNA Thermoplastic Duct Construction Manual.

e. Weld on flange face shall be ground flush with face of flange.

f. Flanges shall be welded to duct in accordance with the SMACNA Thermoplastic Duct Construction Manual.

g. Face of flange shall have no projections or depressions greater than 1/32" and and shall be perpendicular to centerline of duct within 1/20".

h. Unless otherwise specified, bolt size and spacing of bolt holes shall be in accordance with the thermoplastic duct construction manual. For rectangular duct, the first bolt shall be located a maximum of 1-1/2" from outside corner of reinforcement as illustrated in the SMACNA Thermoplastic Duct Construction Manual. Flat washers shall be used under both the nut and bolt head.

i. Under non-corrosive external conditions, cadmium plated or suitable protected mild steel hardware may be used. In corrosive atmospheres, hardware for joining flanges shall be an appropriate type of stainless steel.

j. Care shall be exercised in tightening of flange bolts so as not to overstress the PVC flange or its attachment to the duct.

k. Flanged joints shall be provided with a gasket of suitable material which is compatible with the chemical environment and materials from which duct is made. After joint assembly, gasket material shall not protrude more than 1/8 inch beyond inside surface of duct, nor shall a cavity of more than 1/8 inch be formed below internal duct surface. Flange gaskets shall be of sufficient thickness to properly seal a joint, and shall be a minimum of 3/32 inch thick for duct dimensions up through 24 inches diameter, and 3/16 inch thick for duct diameters greater than 24 inches. Gaskets shall be of the full face type having an unbroken perimeter.

5.11 Duct Hangers and Supports

5.11.1 All duct supports (inside and outside) will be provided by others and are not a part of this contract.

5.12 Drains

5.12.1 Drains shall be full sized half couplings, not less than 1" diameter and suitable for receiving standard IPS pipe connections unless otherwise specified.

5.12.2 Fittings shall be continuously welded and trimmed flush with interior surface of duct.

5.12.3 Reinforcement plates shall be provided in the ductwork wherever necessary to insure rigid connection of drains.

6.0 ACCEPTABLE MANUFACTURERS

6.1 **VIRON®** INTERNATIONAL CORPORATION
505 Hintz Road
Owosso, MI 48867-9603
Phone (989) 723-8255
Fax (989) 723-8417
Web: www.vironintl.com
E-mail: info@vironintl.com

PVC ANGLE RING SCHEDULE

DUCT DIAMETER	ANGLE SIZE	BOLT SIZE	BOLT HOLE DIAMETER	BOLT SPACING	
				ROUND	RECTANGULAR
				NUMBER OF BOLTS EQUALLY SPACED	BOLT HOLES EQUALLY SPACED
4	1 1/2" X 1 1/2" X 3/16"	1/4"	5/16"	6	4"
6	1 1/2" X 1 1/2" X 3/16"	1/4"	5/16"	6	4"
8	1 1/2" X 1 1/2" X 3/16"	1/4"	5/16"	8	4"
10	1 1/2" X 1 1/2" X 3/16"	1/4"	5/16"	8	4"
12	1 1/2" X 1 1/2" X 3/16"	1/4"	5/16"	12	4"
14	1 1/2" X 1 1/2" X 3/16"	1/4"	5/16"	12	4"
16	1 1/2" X 1 1/2" X 3/16"	1/4"	5/16"	16	4"
18	1 1/2" X 1 1/2" X 3/16"	1/4"	5/16"	16	4"
20	1 1/2" X 1 1/2" X 3/16"	1/4"	5/16"	16	4"
22	1 1/2" X 1 1/2" X 3/16"	1/4"	5/16"	20	4"
24	2" X 2" X 1/4"	5/16"	3/8"	20	4"
26	2" X 2" X 1/4"	5/16"	3/8"	24	4"
28	2" X 2" X 1/4"	5/16"	3/8"	24	4"
30	2" X 2" X 1/4"	5/16"	3/8"	24	4"
32	2" X 2" X 1/4"	5/16"	3/8"	28	4"
34	2" X 2" X 1/4"	5/16"	3/8"	30	4"
36	2" X 2" X 1/4"	5/16"	3/8"	32	4"
38	2" X 2" X 1/4"	5/16"	3/8"	32	4"
40	2" X 2" X 1/4"	5/16"	3/8"	34	4"
42	2" X 2" X 1/4"	5/16"	3/8"	36	4"
44	2" X 2" X 1/4"	5/16"	3/8"	36	4"
46	2" X 2" X 1/4"	5/16"	3/8"	38	4"
48	2" X 2" X 1/4"	5/16"	3/8"	40	4"
50	2" X 2" X 1/4"	5/16"	3/8"	42	4"
52	2" X 2" X 1/4"	5/16"	3/8"	42	4"
54	2" X 2" X 1/4"	5/16"	3/8"	44	4"
56	2" X 2" X 1/4"	5/16"	3/8"	46	4"
58	2" X 2" X 1/4"	5/16"	3/8"	48	4"
60	2" X 2" X 1/4"	5/16"	3/8"	50	4"
72	2" X 2" X 1/4"	5/16"	3/8"	60	4"

TABLE NO.: 1

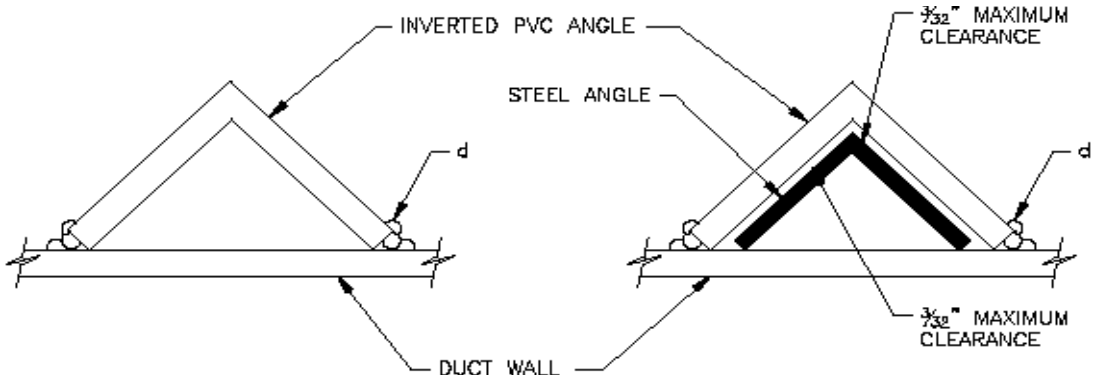

WITHOUT STEEL ANGLE **WITH STEEL ANGLE**

d = 3 WELDING PASSES CONTINUOUS PVC WELD BOTH SIDES. TYPICAL

TYPICAL PVC INVERTED ANGLE REINFORCEMENT | FIG. #1

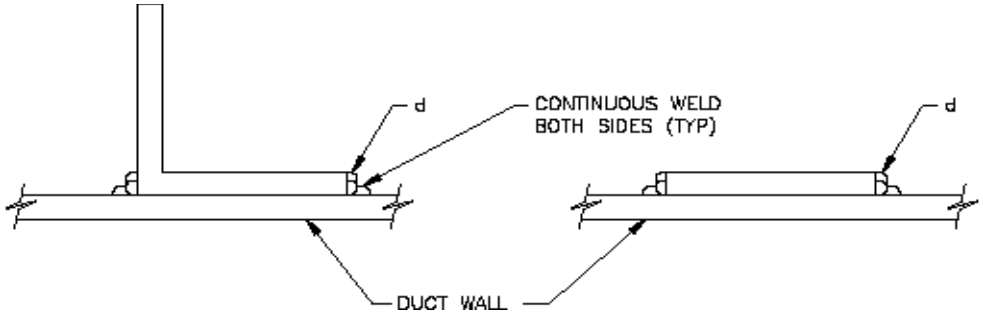

ANGLE **SLEEVE STRAP**
(REINFORCEMENT)

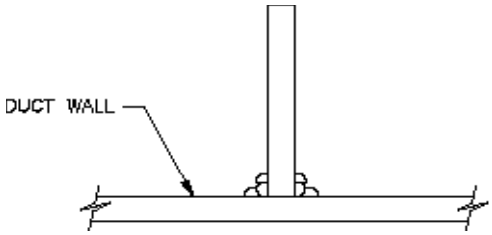

FLAT ON EDGE

d = 3 WELDING PASSES CONTINUOUS PVC WELD BOTH SIDES. TYPICAL

TYPICAL PVC FLAT EDGE REINFORCEMENT | FIG. #2

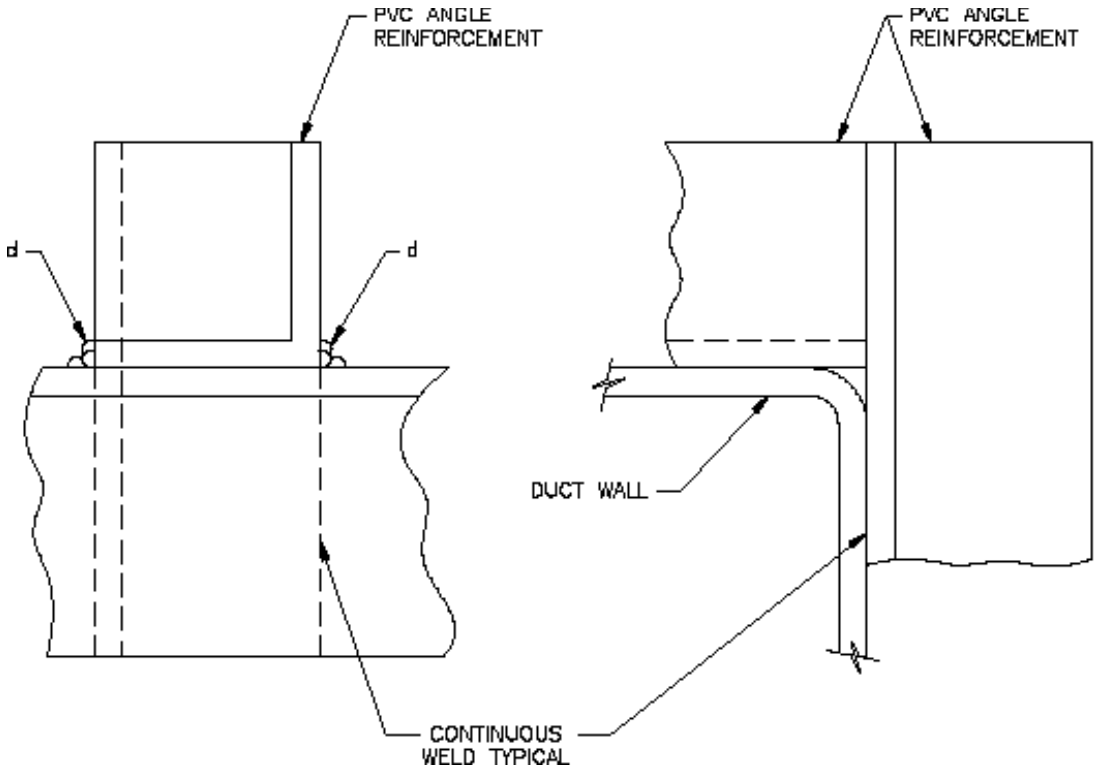

LAPPED CORNER

d = 3 WELDING PASSES
CONTINUOUS PVC WELD
BOTH SIDES. TYPICAL

PVC REINFORCEMENT FOR RECTANGULAR DUCT	FIG. #3

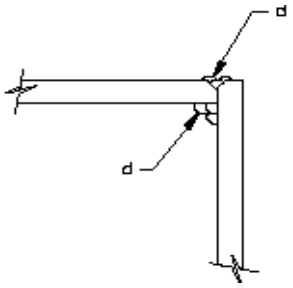

WELDED CORNER
(FITTINGS ONLY)
NOT RECOMMENDED FOR
STRAIGHT DUCT

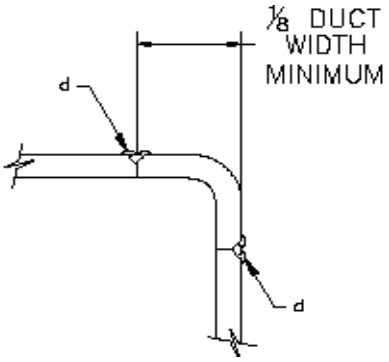

FORMED CORNER

d = 3 WELDING PASSES
CONTINUOUS PVC WELD
BOTH SIDES. TYPICAL

RECTANGULAR DUCT CORNER CONSTRUCTION | FIG. #4

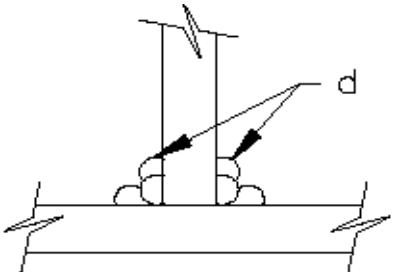

FILLET WELD
90 DEGREE BUTT
CONNECTION

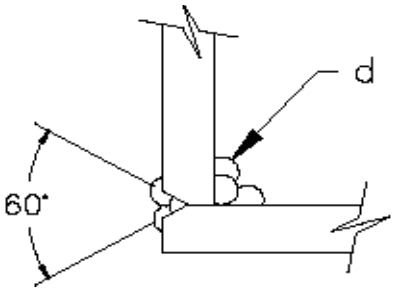

OUTSIDE CORNER
WELD

NORMAL POSITION OF BEVELED
PIECES PRIOR TO ROOT PASS
WITH FILLER ROD WHEN TACK
WELDING IS NOT USED

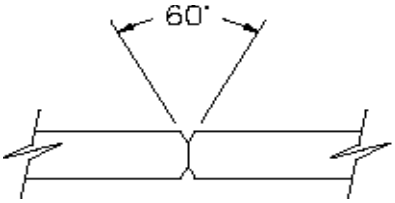

BEVELING FOR BUTT WELD

d = 3 WELDING PASSES
CONTINUOUS PVC WELD
BOTH SIDES. TYPICAL

PVC HOT GAS WELDING PROCEDURE | FIG. #5

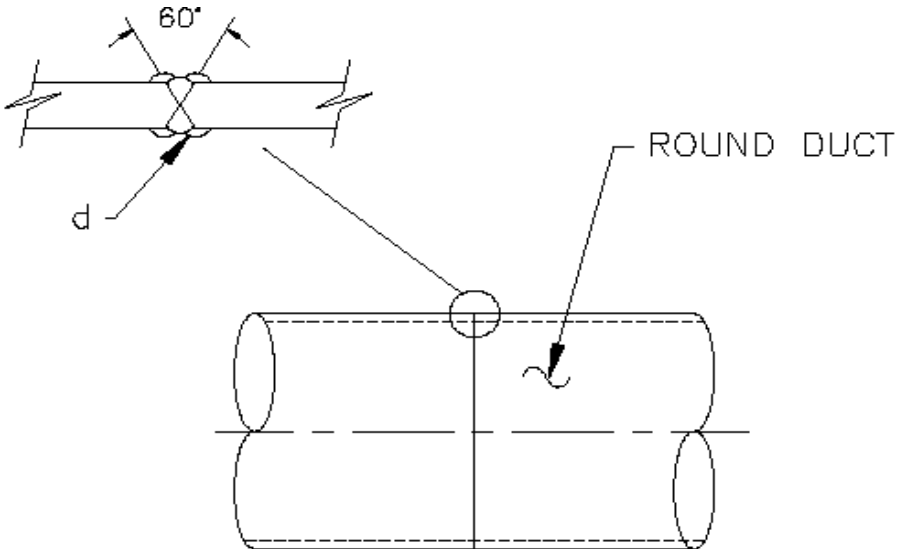

d = 3 WELDING PASSES
CONTINUOUS PVC WELD
BOTH SIDES. TYPICAL

PVC BUTT WELD JOINT	FIG. #6

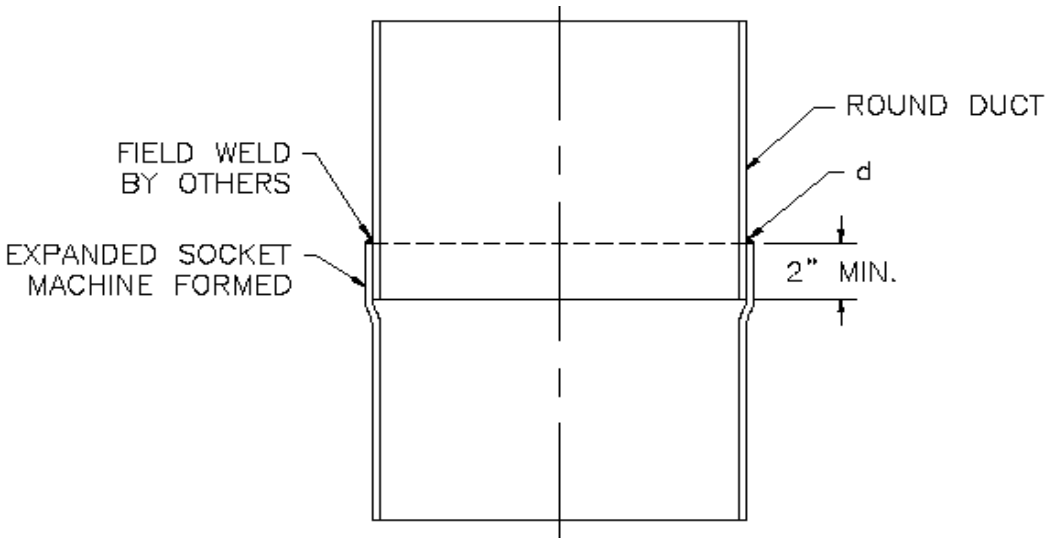

d = 3 WELDING PASSES
CONTINUOUS PVC WELD
BOTH SIDES. TYPICAL

PVC BELL & SPIGOT JOINT	FIG. #7

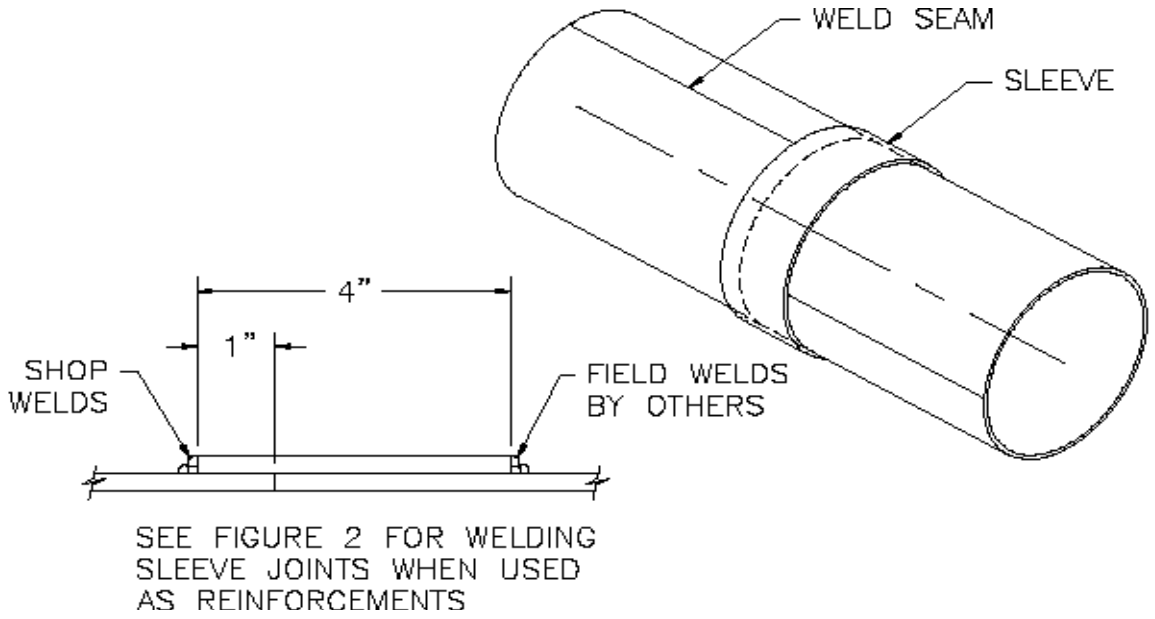

PVC COLLAR SLEEVE JOINT	FIG. #8

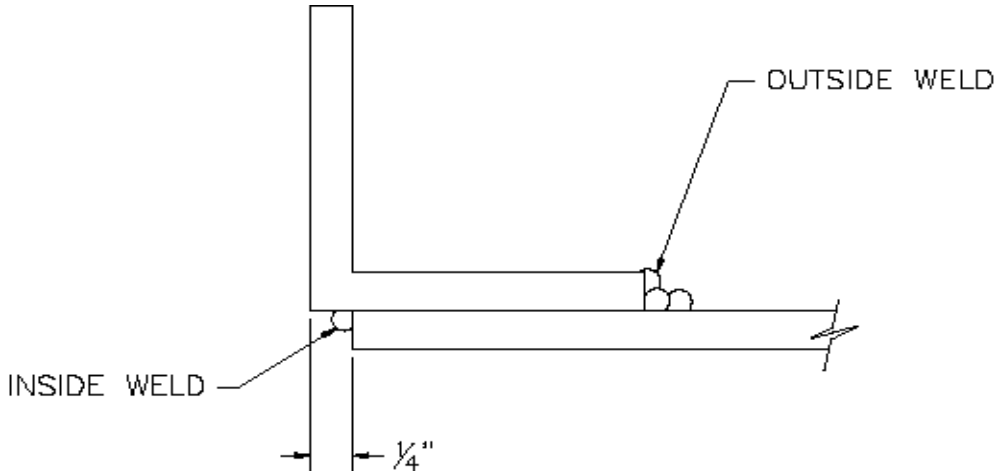

PVC ATTACHMENT OF FLANGE TO DUCT	FIG. #9

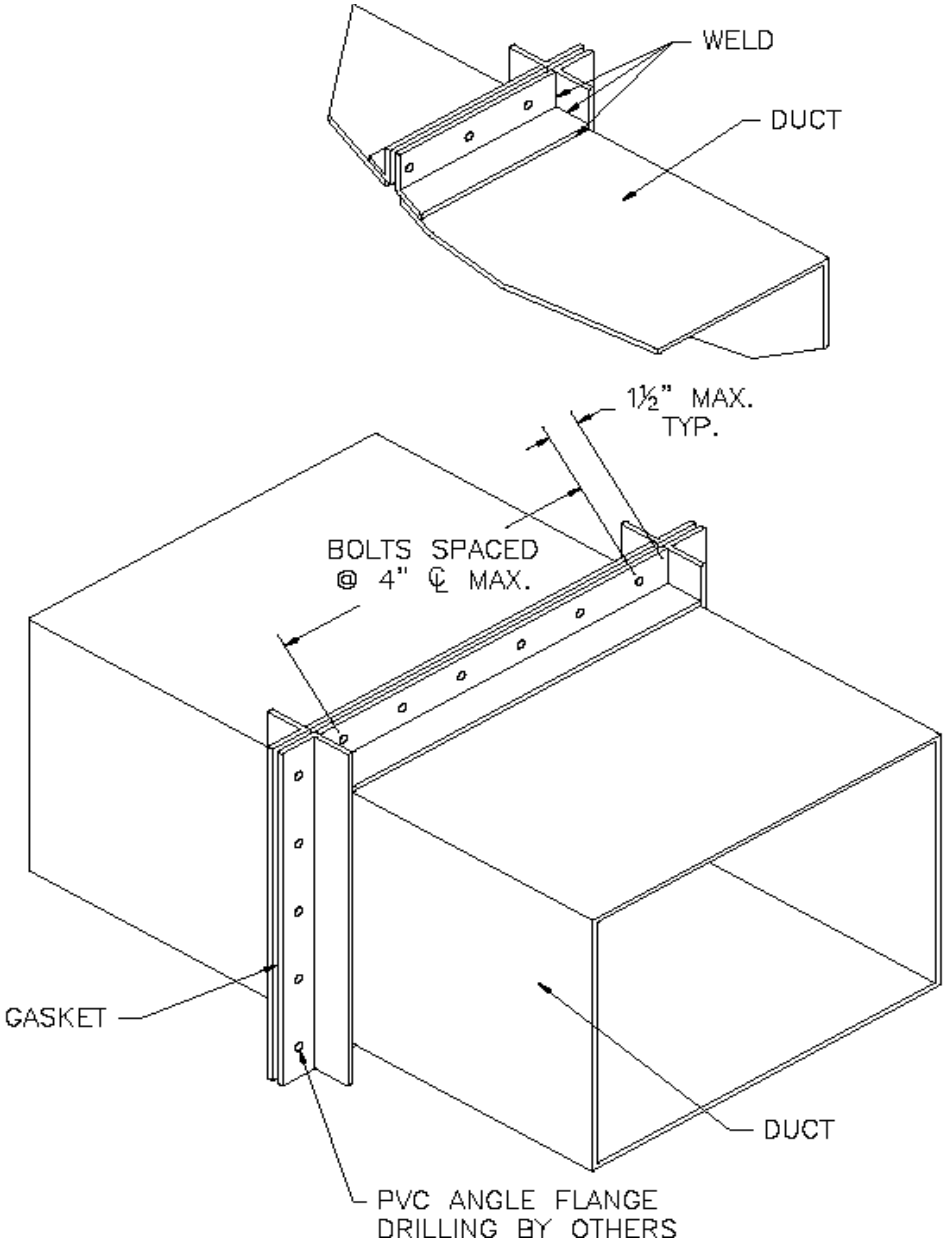

FLANGED FOR RECTANGULAR DUCT	FIG. #10

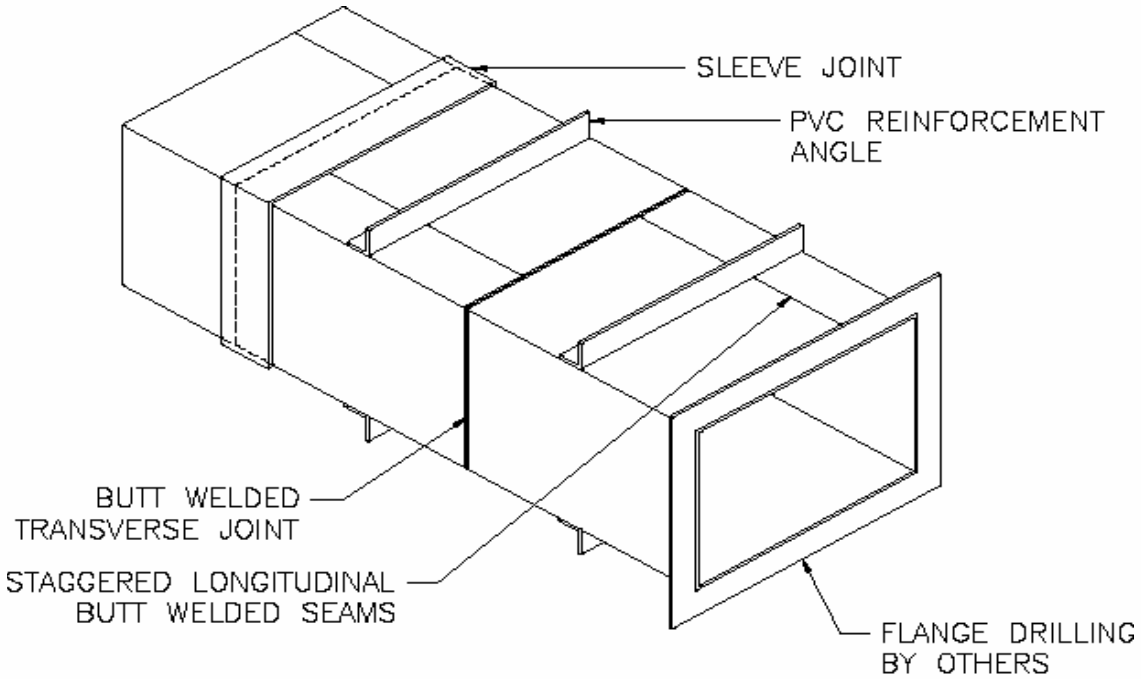

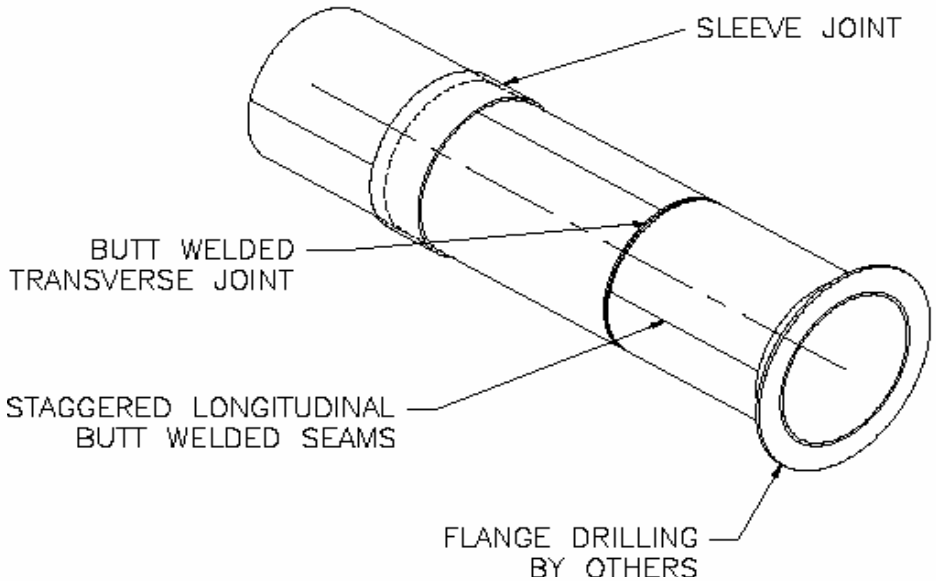

TYPICAL FACTORY PREFABRICATED DUCT	FIG. #11

Trovidur®

RIGID PVC - PRESS LAMINATED, EXTRUDED

CHEMICAL RESISTANCE HANDBOOK
FOR

TROVIDUR 250 SERIES **TYPE II, GRADE 1, PVC**

STANDARD CONFORMITY:
US COMMERCIAL STANDARD CS-201-55
FED. SPEC. L-P 535 C
FED. SPEC. L-P 394A
ASTM D 1784

CHEMICALS	CONCEN-TRATION	TEMPERATURE	
		72°F	140°F
ACETALDEHYDE (AQUEOUS)	100	—	—
ACETANILIDE	100	+	
ACETATE SOLVENTS (CRUDE)		—	—
ACETATE SOLVENTS (PURE)		—	—
ACETIC ACID	0-10	+	o
	10-20	+	o
	20-30	+	o
	30-60	o	
	80	o	o
	97	+	
	100	o	
ACETIC ACID-GLACIAL	100	o	—
ACETIC ACID VAPORS		+	
ACETIC ANHYDRIDE	100	—	—
ACETONE		—	—
ACETYLENE		+	
ACID MIXTURES (AQUEOUS)			
1) 10% SULFURIC / 20% NITRIC / 70% WATER			
2) 48% SULFURIC / 49% NITRIC / 3% WATER		o	
3) 50% SULFURIC / 33% NITRIC / 17% WATER		o	
4) 37.5% SULFURIC / 40% PHOSPHORIC / 22.5% WATER			
5) 15% NITRIC / 4% HYDROFLUORIC		+	
6) 13% SODIUM DICHROMATE / 16% NITRIC / 71% WATER		+	o
ACRYLIC PRE-POLYMER IN AQUEOUS ETHANOL	200 G/1		
ADIPIC ACID	SATUR.	+	o
ALCOHOL, AQUEOUS WITH DENATURED CAMPHOR	200/0.51		
ALLYL ALCOHOL	96	+	—
ALLYL CHLORIDE	100	—	—
ALUM	SATUR.	+	o
ALUMINUM CHLORIDE	10	+	o
ALUMINUM FLUORIDE		+	
ALUMINUM HYDROXIDE		+	
ALUMINUM OXYCHLORIDE		+	+
ALUMINUM NITRATE		+	+
ALUMINUM SULFATE	10	+	+
AMMONIA - DRY GAS	100	+	+
AMMONIA - LIQUID	25	+	
	SATUR.	+	o
AMMONIUM BIFLUORIDE	20	+	
AMMONIUM CARBONATE		+	+
AMMONIUM CHLORIDE		+	o
AMMONIUM FLUORIDE	25	+	
AMMONIUM HYDROXIDE	28	o	o
AMMONIUM METAPHOSPHATE		+	+
AMMONIUM NITRATE	10	+	o
AMMONIUM PERSULFATE		+	+
AMMONIUM PHOSOHATE (AMMONIACAL)		+	
AMMONIUM PHOSPHATE (NEUTRAL)		+	+
AMMONIUM SULFATE		+	+
AMMONIUM SULFIDE		+	+
AMMONIUM THIOCYANATE		+	
AMYL ACETATE	100	—	—
AMYL ALCOHOL	100	+	o
AMYL CHLORIDE	100	—	—
ANILINE	100	—	—
ANILINE CHLOROHYDRATE		+	—
ANILINE HYDROCHLORIDE			
ANTHRAQUINONE			
ANTHRAQUINONESULFONIC ACID		+	+
ANTIMONY TRICHLORIDE	90	+	+
AQUA REGIA	SATUR.	o	—
ARSENIC ACID	80	+	o
	SATUR.		
ARYLSUFONIC ACID			
ASPHALT		+	
BARIUM CARBONATE		+	o
BARIUM CHLORIDE		+	+

CHEMICALS	CONCEN-TRATION	TEMPERATURE	
		72°F	140°F
BARIUM HYDROXIDE		+	+
BARIUM SULFATE		+	o
BARIUM SULFIDE		+	+
BEER			+
BEET SUGAR LIQUOR		+	+
BENZALDEHYDE		—	—
BENZENE (GASOLINE)	100	+	+
BENZENE/BENZOL MIXTURE	80/20		
BENZENESULFONIC ACID	10	+	o
BENZOIC ACID		+	o
BENZOL		+	
BISMUTH CARBONATE		+	+
BLEACH 12.5% ACTIVE CHLORINE		+	o
BLEACHING POWDER (MOIST PASTE)		+	o
BORAX	SATUR.	+	o
BORIC ACID		+	+
BORON TRIFLUORIDE	100	+	+
BRINE		+	+
BROMIC ACID		+	o
BROMINE, LIQUID	100	—	—
BROMINE WATER	SATUR.	—	—
BUTANE	100	+	o
BUTANOL (PRIMARY)	100	+	—
BUTANOL (SECONDARY)		+	—
BUTTER		+	+
BUTYL ACETATE	100	—	—
BUTYL ACOHOL		o	—
BUTYL PHENOL		o	—
BUTYLENE		+	
BUTYNEDIOL (ERYTHRITOL)		—	—
BUTYRIC ACID	20	+	—
	CONCEN.	o	
CALCIUM BISULFATE		+	+
CALCIUM CARBONATE		+	+
CALCIUM CHLORATE		+	+
CALCIUM CHLORIDE	10	+	o
CALCIUM HYDROXIDE		+	+
CALCIUM HYPOCHLORITE		+	o
CALCIUM NITRATE		+	+
CALCIUM SULFATE		+	+
CANE SUGAR LIQUORS		+	+
CARBON BISULFIDE		—	—
CARBON DIOXIDE		+	+
CARBON DIOXIDE (GAS)	100	+	+
CARBON MONOXIDE		+	+
CARBON TETRACHLORIDE	100	o	—
CARBONIC ACID		+	+
CASEIN	100	+	+
CASTOR OIL		+	+
CAUSTIC POTASH		+	+
CAUSTIC SODA		+	o
CAUSTIC SODA, LIQUID	5	+	o
	10	+	
	15		
	20		
	30		
	40	+	o
	50		+
CHLOROACETIC ACID	33	+	—
CHLORIC ACID	20	+	
CHLORINE GAS (DRY)		o	—
CHLORINE GAS (MOIST)	97	—	—
CHLORINE WATER (WATER + BLEACHING POWDER)	12.5		
	SATUR.	o	
CHLORBENZENE	100	—	—
CHLOROFORM	100	—	—
CHLOROSULFONIC ACID		—	—

LEGEND: + EXCELLENT o FAIR — NON-RESISTANT

CHEMICALS	CONCEN-TRATION	TEMPERATURE		CHEMICALS	CONCEN-TRATION	TEMPERATURE	
		72°F	140°F			72°F	140°F
CHROME ALUM	10	+	+	FORMALDEHYDE	15	+	o
CHROMIC ACID	10	+	o	FORMALIN	5	+	o
	25	+			CONCEN.	+	
	30	+		FORMIC ACID	50	+	
	40	+			100	+	o
	50	o	—	FREON 12		+	o
CHROMIC ACID/SULFURIC ACID/WATER	50/15/35	+	o	FRUCTOSE		+	+
CITRIC ACID		+	+	FRUIT PULPS AND JUICES		+	+
COCONUT OIL		+	+	FUEL OIL (CONTAINS H2SO4)		+	+
COPPER CHLORIDE		+	+	FUEL OIL A			
COPPER CYANIDE		+	+	FUEL OIL B			
COPPER FLUORIDE	2	+	+	FUEL OIL, EXTRA LIGHT		o	
COPPER NITRATE		+	+	FURFURAL	100	—	—
COPPER SULFATE	10	+	o	GALLIC ACID		+	+
CORE OILS		+	+	GAS (COKE OVEN)		o	—
COTTON SEED OIL		+	+	GAS - MANUFACTURED		—	—
CRESOL	41	o	—	GAS - NATURAL (DRY)		+	+
M-CRESOL	90	o		GAS - NATURAL (WET)		+	+
CRESOL SULFONIC ACID	CONCEN.			GAS MIXTURE (88% N2/ 11% CO2/ 1% O AND NO)			
CRESYLIC ACID	50	o	—	GASOLINE - REFINED		+	+
CROTONALDEHYDE	100	—	—	GASOLINE - SOUR		+	+
CRUDE OIL - SOUR		+	+	GELATIN		+	+
CRUDE OIL - SWEET		+	+	GLUCOSE		+	o
CYCLOHEXANOL	100	+	—	GLYCERIN (GLYCEROL)	100	+	+
CYCLOHEXANONE		—	—	GLYCOL		+	+
DEGREASING BATH				GLYCOLIC ACID	30	+	+
DEMINERALIZED WATER		+	o	GREEN LIQUOR (PAPER INDUSTRY)		+	+
DEXTRIN		+	+	HEPTANE		o	—
DEXTROSE		+	+	HEXANE		—	—
DIAZO SALTS		+	o	HEXANOL, TERTIARY		o	—
DICHROMATE CLEANING SOLUTIONS		+	o	HYDROBROMIC ACID	20	+	o
DIESEL FUEL		+			40		
DIGLYCOLIC ACID		+	o	HYDROCHLORIC ACID	5	+	o
DIMETHYLHYDRAZINE	15				10		
DIMETHYLAMINE		—	—		32	+	
DIOCTYLPHTHALATE		—	—		36	+	o
DISODIUM PHOSPHATE		+	+	HYDROCYANIC ACID OR HYDROGEN CYANIDE		+	+
DISTILLED WATER		+	o	HYDROFLUORIC ACID	4	o	o
EAU DE COLOGNE	SATUR.				5-7		
ELECTROLYTE N1					10	+	o
ELECTROLYTE BATH(150G/I H20, 40G/I THIOCRESOLIC ACID)					48	o	—
ELECTROLYTE - LIQUID				HYDROGEN		+	+
ETHERS	100	—	—	HYDROGEN PEROXIDE	10	+	o
ETHYL ACETATE		—	—		30	+	o
ETHYL ACRYLATE		—	—		50	+	—
ETHYL ALCOHOL	10	+	o		60		
	96	+	o		90	—	—
ETHYL CHLORIDE		—	—		100	—	—
ETHYL ETHER		—	—	HYDROGEN PHOSPHIDE		+	o
ETHYLENE BROMIDE		—	—	HYDROGEN SULFIDE (AQUEOUS SOLUTION AND DRY)		+	+
ETHYLENE CHLOROHYDRIN		—	—	HYDROQUINONE		+	+
ETHYLENEDICHLORIDE		—	—	HYDROXYLAMINE SULFATE		+	+
ETHYLENE GLYCOL		+	+	HYPOCHLOROUS ACID		+	+
ETHYLENE OXIDE		—	—	IODINE (IN ALCOHOL)		—	—
FATTY ACIDS		+	+	ISOPROPYLALCOHOL		+	+
FERRIC CHLORIDE		+	+	KEROSENE		+	+
FERRIC NITRATE		+	+	KODAK FIXER		+	+
FERRIC SULFATE		+	o	KODAK SHORT STOP		+	+
FERROUS CHLORIDE		+	+	LACTIC ACID	5	+	o
FERROUS SULFATE		+	+		28	+	—
FISH SOLUBLES		+	+		40	+	
FLUORINE GAS - DRY		—	—	LARD OIL		+	
FLUORINE GAS - WET		—	—	;AURIC ACID		+	+
FLUOROBORIC ACID		+	+	LAURYL CHLORIDE		+	+
FLUOROSILICIC ACID	40	+	—	LAURYL SULFATE		+	+
FLUSHING AGENT	SATUR.	+		LEAD ACETATE		+	+
FORMALDEHYDE	10	+		LIME SULFUR		+	+

LEGEND: **+ EXCELLENT** **o FAIR** **— NON-RESISTANT**

CHEMICALS	CONCEN-TRATION	TEMPERATURE		CHEMICALS	CONCEN-TRATION	TEMPERATURE	
		72°F	140°F			72°F	140°F
LINOLEIC ACID		+	+	PHOSPHORIC ACID	0-25	+	o
LINSEED OIL					25-50	+	o
LIQUORS		+	+		50-75	+	+
LUBRICATING COMPOUND BEALON M285 (ESSO)		+	o		85	+	
LUBRICATING OILS				PHOPHOROUS (YELLOW)		o	—
MAGNESIUM CARBONATE		+	+	PHOPHOROUS PENTOXIDE	100	+	
MAGNESIUM CHLORIDE		+	+	PHOSPHOROUS TRICHLORIDE	100	—	—
MAGNESIUM HYDROXIDE		+		PHOTOGRAPHIC CHEMICALS		+	o
MAGNESIUM NITRATE		+		DEVELOPERS	USAGE	+	o
MAGNESIUM SULFATE		+	o	ISOPA E AND ISOPA 6	1:2		
MALEIC ACID		+		RODINAL	USAGE	+	o
MALIC ACID		+		ULTRAFIN	USAGE	+	o
MERCURIC CHLORIDE		+	o	FIXING BATH	NOT GIVEN	+	o
MERCURIC CYANIDE		+			100G/l	+	o
MERCUROUS NITRATE		+		PICRIC ACID		—	—
MERCURY		+	+	PLATING SOLUTIONS			
METHYL ALCOHOL, AQUEOUS	5	+		BRASS		+	+
	96	+		CADMIUM		+	o
	96	+		CHROMIUM		o	o
	100	+		COPPER		+	+
METHYL CHLORIDE		—	—	GOLD		+	+
METHYL ETHYL KETONE		—	—	INDIUM		+	+
METHYL SULFATE		+	o	LEAD		+	+
METHYL SULFURIC ACID	50	+	+	NICKEL		+	+
METHYLENE CHLORIDE		—	—	PHODIUM		+	+
MILK		+	+	SILVER		+	+
MINERAL OILS				TIN		+	+
MINERAL OIL (SHELL X-100)		+	+	ZINC		+	+
MOLASSES		+	+	POTASSIUM ACID SULFATE		+	+
NAPTHA		+	o	POTASSIUM ANTIMONATE		+	o
NAPTHALENE	100	—	—	POTASSIUM BICARBONATE		+	+
NICKEL ACETATE		+	+	POTASSIUM BICHROMATE		+	+
NICKEL CHLORIDE		+	+	POTASSIUM BISULFATE		+	+
NICKEL NITRATE		+	+	POTASSIUM BORATE		+	o
NICKEL SULFATE		+	+	POTASSIUM BROMATE	10	+	+
NICOTINE		+	+	POTASSIUM BROMIDE	10	+	o
NICOTINE ACID		+	o	POTASSIUM CARBONATE		+	+
NITRIC ACID	5	+	o	POTASSIUM CARBONATE, AQUEOUS			
	10	+	o	POTASSIUM CHLORIDE		+	o
	50	o		POTASSIUM CHROMATE	40	+	+
	65	—		POTASSIUM CUPROCYANIDE		+	
	68	+	—	POTASSIUM CYANIDE		+	o
NITRIC ACID (ANHYDROUS)		—	—	POTASSIUM DICHROMATE	40	+	+
NITROBENZENE	100	—	—	POTASSIUM DICHROMATE, AQUEOUS	10	+	
NITROUS OXIDE		+	o	POTASSIUM FERRICYANIDE		+	o
OILS AND FATS		+	+	POTASSIUM FLUORIDE		+	+
OLEIC ACID		+	+	POTASSIUM HYDROXIDE		+	+
OLEUM	10	—	—		5	+	o
OLIVE OIL		+	+		10	+	o
OXALIC ACID	80G/l	+	o		40	+	o
OXYGEN		+	+		50		
OZONE	TO .1%			POTASSIUM HYPOCHLORITE		o	—
	10	—	—	POTASSIUM NITRATE		+	+
PALMITIC ACID	10	+	+	POTASSIUM PERBORATE		+	+
	70	o	—	POTASSIUM PERCHLORITE		+	
PECTIN SOLUTION				POTASSIUM PERMANGANATE	5	+	o
PERACETIC ACID	40	—	—		10	+	o
PERCHLORIC ACID	10	+	o		SATUR.	+	o
	70	o	—	POTASSIUM PERSULFATE	SATUR.	+	+
PHENOL	5	o		POTASSIUM SULFATE		+	+
	10	o		PROPANE		+	
	90	o	—	PROPARGYL ALCOHOL	7	+	+
	100			PROPYL ALCOHOL		+	+
PHENYLHYDRAZINE	100	—	—	PROPYLENE DICHLORIDE		—	—
PHENYLHYDRAZINE HYDROCHLORIDE		o	—	RAYON COAGULATING BATH		+	o
PHOSGENE (GAS)		+	o	SALICYLIC ACID	2.5G/l	+	o
PHOSGENE (LIQUID)		—	—	SALT WATER		+	o

LEGEND: **+ EXCELLENT** **o FAIR** **— NON-RESISTANT**

CHEMICALS	CONCEN-TRATION	TEMPERATURE		CHEMICALS	CONCEN-TRATION	TEMPERATURE	
		72°F	140°F			72°F	140°F
SEA WATER	100	+	o	UREA	33	+	+
SELENIC ACID		+	+	UREA, AQUEOUS	10		
SERPENTINE OIL		+	o	URINE		+	o
SILICIC ACID		+	+	VINEGAR		+	o
SILVER CYANIDE		+	+	VINYL ACETATE		—	—
SILVER NITRATE		+	o	WATER	100	+	o
SOAPS		+	o	WATER - ACID MINE WATER		+	o
SOAPS SOLUTION		+	o	WATER - DISTILLED		+	o
SODIUM ACETATE		+	+	WATER - FRESH		+	o
SODIUM ACID SULFATE		+		WATER - SALT		+	o
SODIUM ANTIMONATE		+		WHISKEY		+	
SODIUM ARSENITE		+		WINES		+	+
SODIUM BENZOATE		+	o	XYLENE OR XYLOL	100	—	—
SODIUM BICARBONATE		+	+	ZINC CHLORIDE		+	o
SODIUM BISULFATE		+	o	ZINC NITRATE		+	
SODIUM BISULFITE	10	+		ZINC SULFATE		+	o
SODIUM BROMIDE		+	+				
SODIUM CARBONATE (SODA ASH)	10	+	o				
SODIUM CHLORATE		+	o				
SODIUM CHLORIDE	10	+	+				
SODIUM CYANIDE		+	+				
SODIUM DICHROMATE		+	o				
SODIUM FERRICYANIDE		+	+				
SODIUM FERROCYANIDE		+	+				
SODIUM FLUORIDE		+	+				
SODIUM HYDROGEN SULFIDE	10	+	+				
SODIUM HYDROXIDE		+	+				
SODIUM HYPOCHLORIDE							
SODIUM HYPOCHLORITE (12.5% ACTIVE CHLORINE)		+	o				
SODIUM NITRATE		+	+				
SODIUM PHOSPHATE ACID		o	—				
SODIUM SULFATE		+	+				
SODIUM SULFIDE		+	+				
SODIUM SULFITE		+	+				
STANNIC CHLORIDE		+	o				
STANNOUS CHLORIDE		+	o				
STEARIC ACID		+	+				
SULFUR		o	—				
SULFUR DIOXIDE		+	+				
SULFUR DIOXIDE - LIQUID							
SULFURIC ACID	0-10	+	o				
	10-30	+	o				
	50-75	+	o				
	75-90	o	—				
	95	o	—				
SULFURIC ACID, AQUEOUS	TO 40	+	o				
	70	+					
	80						
	96	o					
	98	o					
TANNIC ACID		+	+				
TANNING LIQUORS		+	+				
TARTARIC ACID		+	+				
TETRAETHYL LEAD	100	o	—				
TETRAHYDROFURAN		—	—				
THIONYL CHLORIDE		—	—				
TIN CHLORIDE		+	+				
TITANIUM TETRACHLORIDE		o	—				
TOLUOL OR TOLUENE	100	—	—				
TRIBUTYL PHOSPHATE	100	—	—				
TRICHLORETHYLENE	100	—	—				
TRIETHANOLAMINE		o	—				
TRIETHYLAMINE		o	—				
TRIMETHYL PROPANE		+	o				
TRISODIUM PHOSPHATE		+	+				
TURKEY RED OIL							
TURPENTINE	100	+	o				

LEGEND: **+ EXCELLENT** **o FAIR** **— NON-RESISTANT**

• LIMITED WARRANTY

VIRON® INTERNATIONAL warrants to the dealers and owners its VIRON® products and parts to be free from defects in workmanship and material under normal use and services for one (1) year after the date of shipment by VIRON to the first retail purchaser or first user: if and only if VIRON® is notified in writing of the defect within fourteen (14) days from date that the defect is discovered. Written notice of defects discovered within the final fourteen (14) days of the warranty period must be sent to VIRON® via facsimile or first class mail prior to the expiration of the warranty period otherwise this warranty shall be void. Our obligation under this warranty is expressly limited to repairing or replacing at our option, without cost at our factory any part or parts therof which shall be returned to and received by VIRON® within such warranty period with transportation charges both to and from VIRON® prepaid, and which our examination shall disclose to our satisfaction to have been defective. In the event a defect is discovered within the final seven days of the warranty period, the returned goods must be received by VIRON® at VIRON®'s facility within seven days following expiration of the warranty period. Any request for repair or replacement should be directed to VIRON® INTERNATIONAL, Owosso, MI.

If examined equipment is found not to be defective or for some other reason not to be within the warranty coverage, seller's service time expended on and off location will be charged to the purchaser. This warranty gives you specific legal rights which vary from state to state. FAILURE TO PAY THE INVOICE IN FULL WILL RESULT IN VOIDING ANY AND ALL WARRANTIES.

• LIMITATION OF WARRANTY AND LIABILITY

This warranty does not apply to such VIRON® products and parts which in the sole judgment of VIRON® have failed as a result of faulty installation or abuse, or incorrect electrical connections or alterations, made by others, or use under abnormal operating conditions or misapplication of products and parts.

This warranty does not apply to damage resulting from shipment or storage of VIRON® products. Purchaser acknowledges that VIRON® products contain rotating parts that may be damaged by the forces of nature if not installed or put to their intended use within seven (7) days of delivery. THIS WARRANTY DOES NOT COVER COMPONENT PARTS THAT CARRY A SEPARATE WARRANTY FROM THE MANUFACTURER OF THE COMPONENT PART.

VIRON® will not approve for payment any repair made outside its factory without prior written consent of its Owosso, Michigan office. The foregoing shall constitute our sole and exclusive warranty and our sole and exclusive liability and is in lieu of all other warranties, whether written, oral, implied or statutory.

THERE ARE NO WARRANTIES WHICH EXTEND BEYOND THE DESCRIPTION ON THE PAGE HEREOF. SELLER DOES NOT WARRANT MERCHANTABILITY THAT SAID GOODS AND ARTICLES ARE OF MERCHANTABLE QUALITY, OR THAT THEY ARE FIT FOR ANY PARTICULAR PURPOSE.

The liability of any seller on any claim of any kind, including contract, warranty, tort, or negligence, for any loss or damage arising out of or connected with or resulting from the sale and purchase of products and parts covered by any VIRON® proposal, acknowledgement, order, or from the performance or breach of any contract pertaining to such sale or purchase, or from the design, manufacture, sale, delivery, resale, installation, technical direction in installation, inspection, repair, operation or use of any products or parts covered by any VIRON® proposal, acknowledgement, order or furnished by seller, shall in no case exceed the price as paid by purchaser allocable to the products or parts therof which give rise to the claim and shall terminate one year after shipment of said products and parts.

IN NO EVENT, WHETHER AS A RESULT OF BREACH OF CONTRACT, OR WARRANTY, OR TORT, OR ALLEGED NEGLIGENCE, DEFECTS, INCORRECT ADVICE OR OTHER CAUSES, SHALL SELLER BE LIABLE FOR SPECIAL, INCIDENTAL OR CONSEQUENTIAL DAMAGES, including but not limited to loss of profits or revenue, loss of use of the equipment or any associated equipment, cost of removal or reinstallation or any cost associated therewith, cost capital, cost of substitute equipment, facilities or services, down time cost, or claims of customers of the purchase of such damages.

VIRON® neither assumes nor authorizes any person to assume for it any other liability in connection with the sale of its products and parts. Some states do not allow the exclusion or limitation of incidental or consequential damages, so all of the above limitations or exclusions may not apply to you.

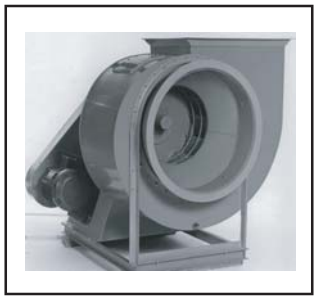

Centrifugal Fan
VCF-100

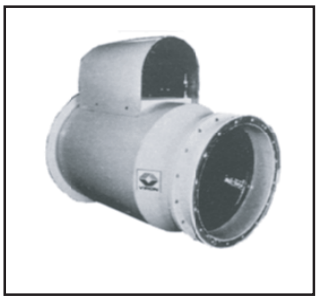

Inline Centrifugal Fan
VIF-200

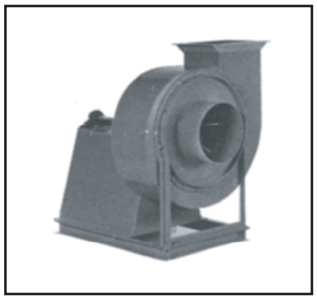

Radial Blower
VRB-600

Lab Blower
VLB-700

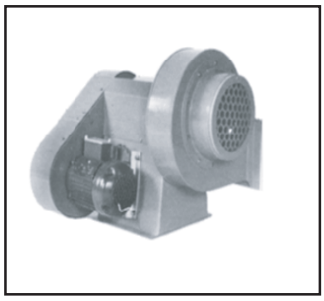

PushBlower
VPB-800

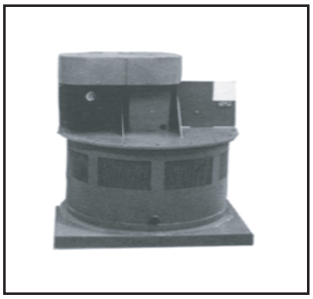

Roof Ventilator
VRV-900

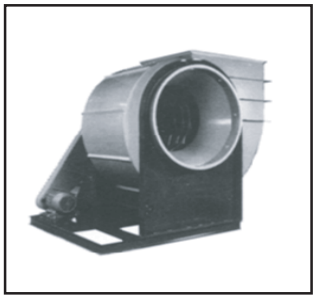

Centrifugal Fan
VCB-1100

Gravity Relief Ventilator
VGR-1300

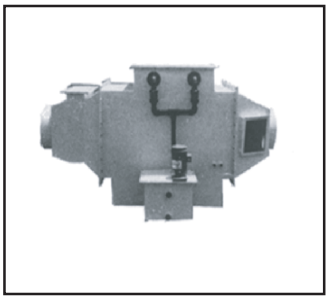

Horizontal Scrubber
VHS-Series

Vertical Scrubber
VVS-Series

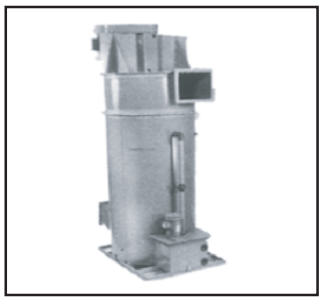

Blower-Scrubber
VBS-Series

VIRO-CHROME 9000®
VCS-Series

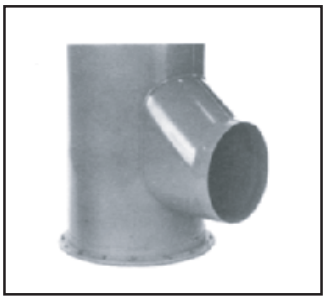

VI-A-DUC®
FM Approved PVC Duct

VIRO-DUC®
FM Approved FRP Duct

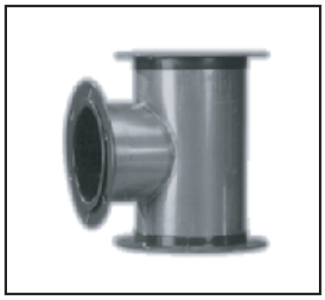

SSTEELCOAT®
FM Approved Duct

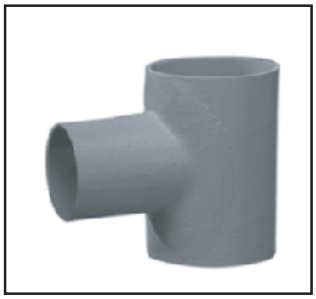

FRP Duct
ICBO Approved

VI-A-TROL®
AMCA Approved Damper

PVC & FRP
Blastgates

FRP Parallel
Blade Damper

FRP Fixed Louver

VIRON® INTERNATIONAL CORP.

505 HINTZ ROAD
OWOSSO, MI 48867-9603
989-723-8255
FAX: 989-723-8417

EMAIL: info@vironintl.com
WEB: www.vironintl.com